MOTOROLA

MSR 2000™

UHF Base and Repeater Stations

450-512 MHz

A-807

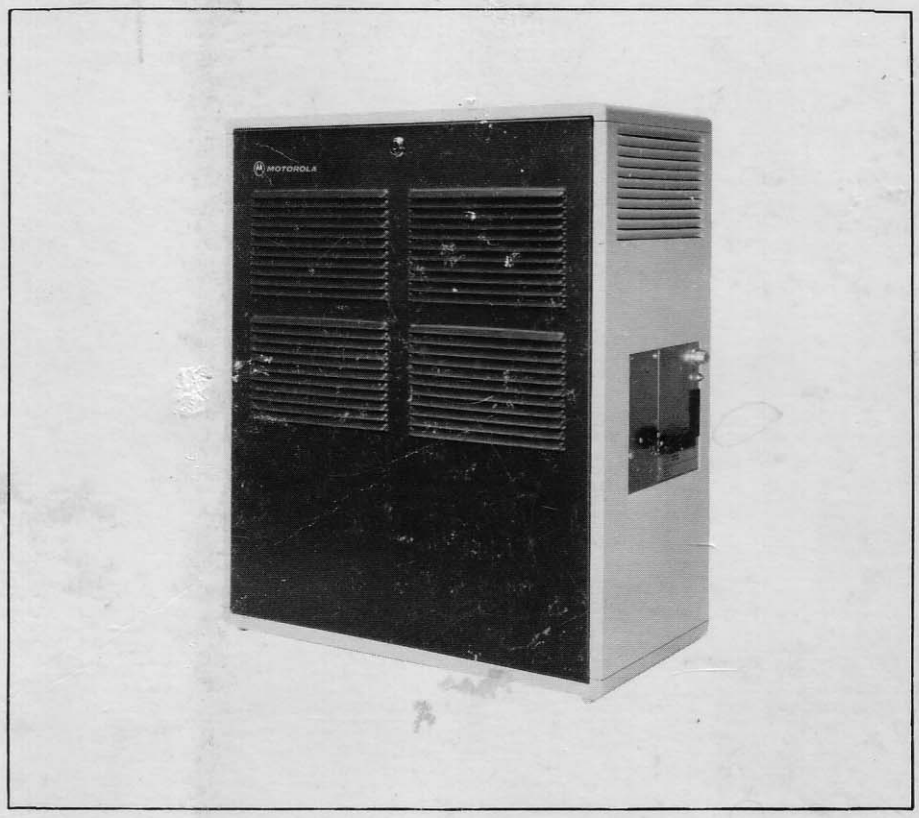

SUPPLEMENT to Instruction Manual 68P81061E50

68P81061E55-C

COMMERCIAL WARRANTY
(STANDARD)

Motorola radio communications products are warranted to be free from defects in material and workmanship for a period of ONE (1) YEAR, (except for crystals and channel elements which are warranted for a period of ten (10) years) from the date of shipment. Parts, including crystals and channel elements, will be replaced free of charge for the full warranty period but the labor to replace defective parts will only be provided for One Hundred-Twenty (120) days from the date of shipment. Thereafter purchaser must pay for the labor involved in repairing the product or replacing the parts at the prevailing rates together with any transportation charges to or from the place where warranty service is provided. This express warranty is extended by Motorola Communications and Electronics, Inc., 1301 E. Algonquin Road, Schaumburg, Illinois 60196, to the original purchaser only, and only to those purchasing for purpose of leasing or solely for commercial, industrial, or governmental use.

THIS WARRANTY IS GIVEN IN LIEU OF ALL OTHER WARRANTIES EXPRESS OR IMPLIED WHICH ARE SPECIFICALLY EXCLUDED, INCLUDING WARRANTIES OF MERCHANTABILITY OR FITNESS FOR A PARTICULAR PURPOSE. IN NO EVENT SHALL MOTOROLA BE LIABLE FOR INCIDENTAL OR CONSEQUENTIAL DAMAGES TO THE FULL EXTENT SUCH MAY BE DISCLAIMED BY LAW.

In the event of a defect, malfunction or failure to conform to specifications established by seller, or if appropriate, to specifications accepted by Seller in writing, during the period shown, Motorola, at its option, will either repair or replace the product or refund the purchase price thereof, and such action on the part of Motorola shall be the full extent of Motorola's liability hereunder.

This warranty is void if:

a. the product is used in other than its normal and customary manner;
b. the product has been subject to misuse, accident, neglect or damage;
c. unauthorized alterations or repairs have been made, or unapproved parts used in the equipment.

This warranty extends only to individual products, batteries are excluded, but carry their own separate limited warranty. Because each radio system is unique, Motorola disclaims liability for range, coverage, or operation of the system as a whole under this warranty except by a separate written agreement signed by an officer of Motorola.

Non-Motorola manufactured products are excluded from this warranty, but subject to the warranty provided by their manufacturers, a copy of which will be supplied to you on specific written request.

In order to obtain performance of this warranty, purchaser must contact its Motorola salesperson or Motorola at the address first above shown, attention Quality Assurance Department.

This warranty applies only within the United States.

EPS-27734-O

COMPUTER SOFTWARE COPYRIGHTS

The Motorola products described in this instruction manual may include copyrighted Motorola computer programs stored in semiconductor memories or other media. Laws in the United States and other countries preserve for Motorola certain exclusive rights for copyrighted computer programs, including the exclusive right to copy or reproduce in any form the copyrighted computer program. Accordingly, any copyrighted Motorola computer programs contained in the Motorola products described in this instruction manual may not be copied or reproduced in any manner without the express written permission of Motorola. Furthermore, the purchase of Motorola products shall not be deemed to grant either directly or by implication, estoppel, or otherwise, any license under the copyrights, patents or patent applications of Motorola, except for the normal non-exclusive, royalty free license to use that arises by operation of law in the sale of a product.

EPS-34440-B

68P81112E94-B

INC.
S

MSR 2000
UHF BASE AND REPEATER STATIONS
450-512 MHz

MOTOROLA
Communication
Sector

NTENTS

CO

NUMBER

.....Inside Cover
.....Page v
.....Page vii
.....Page viii
.....Page ix
.....Page x
.....Pages xi, xii, xiii
.....Pages xiv, xv
.....EPS-28750

SECTION

Warranty .....
Peformance Specifications.....
Model Chart (Current Version).....
Model Breakdown Chart (Current Version) .....
Model Chart (Early Version) .....
Model Breakdown Chart (Early Version) .....
Option Chart .....
Forword.....
General Safety Information .....

SCRIPTION

DES

.....**68P81064E39**
.....Page 1
.....Page 1
.....Page 3
llaneous Parts Lists.....PEPS-32328
ts.....PEPS-32329

DESCRIPTION .....
Introduction .....
Options .....
Maintenance .....
Simplified Functional Block Diagram and Misce
Internal RF Intercabling Diagram and Parts Lis

ECEIVER

R

.....**68P81070E56**
.....Page 1
.....Page 1
.....Page 1
.....Page 1
.....Page 1
.....Page 2
.....Page 2
.....Page 2
.....Page 2
.....Page 2
.....Page 3
.....Page 3
.....Page 3
.....Page 4
.....Page 5

RECEIVER (MODEL TRE6260A, 70A SERIES)...
Description .....
Theory of Operation .....
RF Preselector.....
Local Oscillator and Injection .....
Mixer .....
I-F Circuitry .....
Limiter††Detector.....
9.5 Volt Regulator .....
Delayed Keyed A+ .....
Maintenance .....
Receiver Functional Tests .....
Audio and Squelch Test.....
20 dB Quieting Test .....
Receiver Gain Measurements .....
Troubleshooting Techniques .....

writing services
Road, Schaumburg, IL 60196

68P81061E55-C
5/20/86-PHI

©Motorola, Inc. 1986
All Rights Reserved
Printed in U.S.A.

technical
1301 E. Algonquin

Visual Inspection
ion . . . . . Page 5
A Troubleshooting Technique . . . . . Page 5
ıg Integrated Circuits . . . . . Page 5
ıg Crystals . . . . . Page 5

G CHART PEPS-41770
(Sheet 1 of 2)
K DIAGRAM PEPS-41770
(Sheet 2 of 2)

EDURE PEPS-41727

TAIL AND PARTS LIST PEPS-41729
(Sheet 1 of 2)
AM PEPS-41729
(Sheet 2 of 2)

TRE6160A, 70A SERIES) 68P81064E74
. . . . . Page 1
on . . . . . Page 1
. . . . . Page 1
or and Injection . . . . . Page 1
. . . . . Page 1
. . . . . Page 2
tor . . . . . Page 2
ator . . . . . Page 2
l A+ . . . . . Page 2
. . . . . Page 2
al Tests . . . . . Page 2
uelch Test . . . . . Page 2
g Test . . . . . Page 3
Measurements . . . . . Page 4
echniques . . . . . Page 5
ion . . . . . Page 5
A Troubleshooting Technique . . . . . Page 5
ıg Integrated Circuits . . . . . Page 5
ıg Crystals . . . . . Page 5

G CHART PEPS-37315
(Sheet 1 of 2)
K DIAGRAM PEPS-37315
(Sheet 2 of 2)

EDURE PEPS-37318

TAIL AND PARTS LIST PEPS-37321
(Sheet 1 of 2)
AM PEPS-37321
(Sheet 2 of 2)

TROUBLESHOOTIN
FUNCTIONAL BLO
ALIGNMENT PROC
CIRCUIT BOARD D
SCHEMATIC DIAG
RECEIVER (MODEL
Description . . . . .
Theory of Operati
RF Preselecto
Local Oscillat
Mixer . . . . . .
I-F Circuitry
Limiter/Detec
9.5 Volt Regu
Delayed Keye
Maintenance . . . .
Receiver Function
Audio and Sq
20 dB Quietin
Receiver Gain
Troubleshooting T
Visual Inspect
Alignment As
Troubleshooti
Troubleshooti
TROUBLESHOOTIN
FUNCTIONAL BLO
ALIGNMENT PROC
CIRCUIT BOARD D
SCHEMATIC DIAG

TRANSMITTER

UHF TRANSMITTER **68P81064E76**
General ..... Page 1
Exciter ..... Page 1
Power Amplifier ..... Page 1
Alignment ..... Page 1

ALIGNMENT PROCEDURE ..... **PEPS-37343** (Sheet 1 of 2)
FUNCTIONAL BLOCK INTERCONNECT DIAGRAM ..... **PEPS-37343** (Sheet 2 of 2)

EXCITER (MODEL TLE5502A—SIMPLEX & TLE5512B—DUPLEX) **68P81064E77**
Description ..... Page 1
Theory of Operation ..... Page 1
Transmit Audio Circuit ..... Page 1
Channel Elements ..... Page 1
Multipliers and Amplifiers ..... Page 1
Exciter Functional Tests ..... Page 2
Exciter Power Output Test ..... Page 2
Frequency Test ..... Page 2
Deviation Test ..... Page 2
Troubleshooting ..... Page 2

CIRCUIT BOARD DETAIL AND PARTS LIST ..... **PEPS-37344** (Sheet 1 of 2)
SCHEMATIC DIAGRAM ..... **PEPS-37344** (Sheet 2 of 2)

POWER AMPLIFIER DECK (MODEL TLE2280B SERIES) **68P81070E89**
General ..... Page 1
Theory of Operation ..... Page 1
Power Amplifier Circuitry ..... Page 1
Power Control Circuitry ..... Page 1
Power Amplifier Servicing ..... Page 4
General ..... Page 4
Power Amplifier Substrate Troubleshooting Procedure ..... Page 4
Transistor Module Replacement ..... Page 7
RF Power Amplifier Assembly and A+ Distribution Board Removal ..... Page 7
Power Amplifier Functional Tests ..... Page 7

TRN5696B POWER CONTROL BOARD SCHEMATIC DIAGRAM, CIRCUIT BOARD DETAIL, AND PARTS LIST ..... **PEPS-42068** (Sheet 1 of 3)
POWER AMPLIFIER EQUIPMENT CIRCUIT BOARD AND SUBSTRATE DETAILS, AND PARTS LISTS ..... **PEPS-42068** (Sheet 2 of 3)
SCHEMATIC DIAGRAM ..... **PEPS-42068** (Sheet 3 of 3)

OPTIONS

UHF PREAMPLIFIER, OPTION C12AJ **68P81114E65**
Introduction ..... Page 1
Description ..... Page 1

PERFORMANCE SPECIFICATIONS

Power Supply A.C. Input Current (Amps)			
Standard		Battery Charger****	
Stby	Xmit	Stby (typ.)	Xmit
1	5.5	1.5-2	5.5

****Does not Include Battery Charging Current

:mote control)
d *Digital Private-Line* coded squelch
sure all essential circuits for tuning and checking.
y cycle per RS152B, and RS220A.

0 W (450-470 MHz); 85-45 W (470-494 MHz); 80-45 W
vithin ± .0002% from -30°C to +60°C ambient (+25°C
IBm (dipole substitution method)
60% maximum deviation at 1000 Hz
-3000 Hz, referenced to 1000 Hz
n
Rules.

vithin ± .0002% from -30°C to +60°C ambient (+25°C
Local Service Audio: Output Available: 1 W @ 8 ohms Response: +2, -8 dB Distorton: 5% @ 1000 Hz Hum & Noise: -55 dB

THOUT NOTICE

PERFORMANCE SPECIFICATIONS

GENERAL

Model	Frequency (MHz)	Variable RF Output Power	Maximum PA Final Input DC Power	Standard Input Voltage
C74GRB C74GSB*	450-512	100-50 W** 85-45 W***	270 W	120 V AC +10% -20% 60 Hz

*Fully Optionable Models	**450-470 MHz	***470-512 MHz

Number of ltn Frequencies	One and two-frequency stations (dc and tone r Four-frequency stations (tone remote control)
Squelch Options	Carrier squelch, *Private-Line* coded squelch, ar
Metering	Optional internally-mounted meter used to mea
Industry Standards	Meets EIA specifications per RS204B, 20% dut

TRANSMITTER 450-512 MHz

RF Output Power	Continuously variable, into 50 ohm load: 100-5 (494-512 MHz)
Output Impedance	50 ohms
Oscillator Frequency Stability	Channel element maintains oscillator frequency reference)
Transmitter Sideband Noise	±25 kHz 80 dB below carrier ±1 MHz 95 dB below carrier
Spurious & Harmonics	Conducted 85 dB below carrier; Radiated: -13
Modulation	15F2 and 16F3: ±5 kHz for 100% at 1000 Hz
Audio Sensitivity	Remote telephone line: -20 dBm maximum for
FM Noise	55 dB below 60% system deviation at 1000 Hz
Audio Response	+1, -3 dB from 6 dB/octave pre-emphasis, 300
Audio Distortion	Less than 2% at 1000 Hz; 60% system deviatio
FCC Transmitter Certification	ABZ89FC4634 (±.0002% stability) Licensable under parts 22, 74, and 90 of FCC

RECEIVER 450-512 MHz

Channel Spacing	25 kHz
EIA Modulation Acceptance	±7 kHz minimum
Oscillator Frequency Stability	Channel element maintains oscillator frequency reference)
Sensitivity: 20 dB Quieting EIA SINAD	 Less than 0.5 uV Less than 0.35 uV*
Intermodulation: EIA SINAD	85 dB minimum
Selectivity: EIA SINAD	90 dB
Spurious & Image Rejection	100 dB minimum
Squelch Sensitivity: Carrier Squelch Coded Squelch	 0.2 uV or less at threshold 0.2 uV or less
Remote Control Line Audio Characteristics	Telephone Line: Output: +11 dBm @ 600 ohms Response: +1, -3 dB Distortion: 3% @ 1000 Hz Hum & Noise: -55 dB
FCC Receiver Certification	ABZ89FR4635

* Measured at local speaker.

SPECIFICATIONS SUBJECT TO CHANGE W

MODEL	DESCRIPTION
KLN6209A	*VIBRASPONDER* RESONANT REED
KXN1095A	TRANSMIT ELEMENT 2 PPM
KXN1112AA	RECEIVE ELEMENT (10.7MHZ I-F) 2 PPM
KXN1112AB	RECEIVE ELEMENT (10.8MHZ I-F) 2 PPM
TKN8234B	STATION INTERCONNECT CABLE
TKN8286A	TWO-WIRE LINE CABLE
TKN8288A	PA POWER/EXCITER CABLE
TKN8289A	NON-DUPLEXER CABLES
* TLE2280B	POWER AMPLIFIER DECK SERIES
TLE5502A	SIMPLEX EXCITER
TLE5512B	DUPLEX EXCITER
TLE5551A	2-RECEIVER COUPLER
* TLN2443A	GUARD TONE DECODER MODULE
* TLN2444A	C2-R2 F2 TONE DECODER MODULE
* TLN2472B	BASIC CHASSIS
* TLN2474B	FULLY OPTIONABLE CHASSIS (2 REC)
* TLN2475B	FULLY OPTIONABLE CHASSIS (REPEATER RT)
* TPN1191A	STANDARD POWER SUPPLY
TRE6260A	RECEIVER (10.7MHZ I-F) SERIES
TRE6270A	RECEIVER (10.8MHZ I-F) SERIES
TRN9688A	R1 AUDIO BOARD
TRN9690A	R2 AUDIO BOARD
TRN9691A	R2 AUDIO PL BOARD
TRN9692A	R2 AUDIO DPL BOARD
TRN5073A	DUPLEX PL BOARD
TRN5074A	SIMPLEX PL TA-RA BOARD
TRN5076A	DUPLEX DPL BOARD
TRN5077A	SIMPLEX DPL, TA-RA BOARD
TRN5236A	1-RECEIVER, 2-WIRE AUDIO: LINE DRIVER MODULE
TRN5237A	2-RECEIVER, 2-WIRE AUDIO: LINE DRIVER MODULE
TRN5240A	F1 PL CONTROL MODULE
TRN5254A	F1 CARRIER SQUELCH CONTROL MODULE
TRN5255A	C2-R2 CONTROL MODULE
TRN5256A	F2-R2 MUTE CONTROL MODULE
TRN5295A	CMOS TIME-OUT TIMER
TRN5296A	4-FREQUENCY CONTROL MODULE
TRN5320A	F1 PL TONE DECODER MODULE
TRN5321A	STATION CONTROL MODULE
TRN5322A	F1 TONE DECODER MODULE
TRN5324A	SQUELCH GATE MODULE
TRN5325A	F2 TONE DECODER MODULE
TRN5327A	4-FREQ F1 TONE DECODE MODULE
TRN5328A	4-FREQ F1-PL TONE DECODER MODULE
TRN5350A	SIMPLEX JUNCTION BOX
TRN5351A	DUPLEX JUNCTION BOX
TRN5352A	RF CONNECTOR HOLE PLASTIC PLUG
TRN5353A	D-TYPE CONNECTOR HOLE PLASTIC PLUG
TRN5355A	BATTERY CONNECTOR HOLE PLASTIC PLUG
TRN5425A	24" CABINET SHELL
TRN5427A	110V POWER CORD
TRN5428A	POWER CONTROL BOARD COVER
TRN5431A	REPEATER COVERS
TRN5864A	ANTENNA SWITCH
TRN5888A	DUPLEX RF COVER
TRN5889A	BASIC COVERS
TRN5890A	FULLY OPTIONABLE COVERS
TRN6005A	DPL CODE PLUG
TRN9085A	24" CABINET HARDWARE
TRN9415A	SECOND RECEIVER HARDWARE
TRN9755A	ANTENNA SWITCH

GRB "B" SUFFIX MODELS (BASIC)
GSB "B" SUFFIX MODELS (FULLY OPTIONABLE)
MODEL CHART FOR UHF *MSR 2000*
BASE AND REPEATER (RT) STATIONS

450-470MHZ: 100 TO 50 WATTS VARIABLE RF POWER OUTPUT

470-494MHZ: 85 TO 45 WATTS VARIABLE RF POWER OUTPUT

494-512MHZ: 80 TO 45 WATTS VARIABLE RF POWER OUTPUT

CODE:

- ● = ONE ITEM SUPPLIED
- 2 = INDICATES QUANTITY SUPPLIED
- ▲ = USED IN PLACE OF ONE 10.7MHZ I-F RECEIVER ON TWO RECEIVER STATIONS WITH CERTAIN FREQUENCY COMBINATIONS

C74GRB-6105B

- 5 = DC REMOTE CONTROL
- 6 = TONE REMOTE CONTROL
- 0 = T1-R1
- 1 = T2-R1
- 2 = T2-R2
- 4 = T2-2R (2 RECEIVERS)
- 9 = T4-R4
- 1 = CARRIER SQUELCH
- 3 = PRIVATE LINE CODED SQUELCH
- 6 = DIGITAL PRIVATE-LINE BINARY CODED SQUELCH
- 7 = 100W RF OUTPUT

*REFER TO MODEL BREAKDOWN CHART

CONTROL TYPE	T1=ONE XMIT FREQ T2=TWO XMIT FREQS R1=ONE RCVR FREQ R2=TWO RCVR FREQS 2R=TWO RCVRS ONE FREQ EACH	TYPE OF SQUELCH	STATION MODEL
	BASE STATIONS		
DC	T1-R1	CARRIER	C74GRB-1105B
TONE	T1-R1	CARRIER	C74GRB-1106B
DC	T2-R1	CARRIER	C74GRB-1115B
TONE	T2-R1	CARRIER	C74GRB-1116B
DC	T2-R2	CARRIER	C74GRB-1125B
TONE	T2-R2	CARRIER	C74GRB-1126B
DC	T1-R1	PL	C74GRB-3105B
TONE	T1-R1	PL	C74GRB-3106B
DC	T2-R1	PL	C74GRB-3115B
TONE	T2-R1	PL	C74GRB-3116B
DC	T2-R2	PL	C74GRB-3125B
TONE	T2-R2	PL	C74GRB-3126B
DC	T1-R1	DPL	C74GRB-6105B
TONE	T1-R1	DPL	C74GRB-6106B
DC	T2-R1	DPL	C74GRB-6115B
TONE	T2-R1	DPL	C74GRB-6116B
DC	T2-R2	DPL	C74GRB-6125B
TONE	T2-R2	DPL	C74GRB-6126B
DC	T1-R1	CARRIER	C74GSB-1105B
TONE	T1-R1	CARRIER	C74GSB-1106B
DC	T2-R1	CARRIER	C74GSB-1115B
TONE	T2-R1	CARRIER	C74GSB-1116B
DC	T2-R2	CARRIER	C74GSB-1125B
TONE	T2-R2	CARRIER	C74GSB-1126B
DC	T2-2R	CARRIER	C74GSB-1145B
TONE	T2-2R	CARRIER	C74GSB-1146B
TONE	T4-R4	CARRIER	C74GSB-1196B
DC	T1-R1	PL	C74GSB-3105B
TONE	T1-R1	PL	C74GSB-3106B
DC	T2-R1	PL	C74GSB-3115B
TONE	T2-R1	PL	C74GSB-3116B
DC	T2-R2	PL	C74GSB-3125B
TONE	T2-R2	PL	C74GSB-3126B
DC	T2-2R	PL	C74GSB-3145B
TONE	T2-2R	PL	C74GSB-3146B
TONE	T4-R4	PL	C74GSB-3196B
DC	T1-R1	DPL	C74GSB-6105B
TONE	T1-R1	DPL	C74GSB-6106B
DC	T2-R1	DPL	C74GSB-6115B
TONE	T2-R1	DPL	C74GSB-6116B
DC	T2-R2	DPL	C74GSB-6125B
TONE	T2-R2	DPL	C74GSB-6126B
DC	T2-2R	DPL	C74GSB-6145B
TONE	T2-2R	DPL	C74GSB-6146B
TONE	T4-R4	DPL	C74GSB-6196B
	REPEATER (RT) STATIONS		
DC	T1-R1	CARRIER	C74GSB-1105BT
TONE	T1-R1	CARRIER	C74GSB-1106BT
DC	T1-R1	PL	C74GSB-3105BT
TONE	T1-R1	PL	C74GSB-3106BT
DC	T1-R1	DPL	C74GSB-6105BT
TONE	T1-R1	DPL	C74GSB-6106BT

EEPS-42049-A

MODEL BREAKDOWN CHART
FOR UHF *MSR 2000*
ASE AND REPEATER (RT) STATIONS
470MHZ: 100 TO 50 WATTS VARIABLE RF POWER OUTPUT
494MHZ: 85 TO 45 WATTS VARIABLE RF POWER OUTPUT
512MHZ: 80 TO 45 WATTS VARIABLE RF POWER OUTPUT

ODE:
● = ONE ITEM SUPPLIED

DESCRIPTION	ITEM	HARMONIC FILTER	LOW LEVEL AMPLIFIER	COMBINER (450-494MHZ)	COMBINER (494-512MHZ)	SPLITTER	DRIVER INPUT SUBSTRATE	PRE-DRIVER SUBSTRATE	POWER TRANSISTOR KIT (450-494MHZ)	POWER TRANSISTOR KIT (494-512MHZ)	*VIBRASPONDER* RESONANT REED	INTERNAL PA CABLE	PA MISCELLANEOUS PARTS (450-494MHZ)	PA MISCELLANEOUS PARTS (494-512MHZ)	AUXILARY REGULATOR CHASSIS	INCLUDES:	AUXILARY REGULATOR BOARD	HARDWARE KIT	CHASSIS KIT	AUXILARY REGULATOR CHASSIS WITH BATTERY CHARGER	INCLUDES:	AUXILARY REGULATOR BOARD	BATTERY REVERT CONTROL BOARD	HARDWARE	CHASSIS	BATTERY CHARGER BOARD
		HFE4014A	TLE5791A	HLE4065A	HLE4066A	HLE4070A	HLE4074A	HLE4079A	HLE4168A	HLE4084A	KLN6209A	TKN8871A	TLE5623A	TLE5624A	TPN1189A		TRN5119A	TRN5297A	TRN5299A	TPN1190A		TRN5119A	TRN5297A	TRN5298A	TRN5299A	TPN6137A
100 TO 45 WATT VARIABLE POWER PA DECK (450-494MHZ)		●	●	●		●	●	●	●			●	●													
80 TO 45 WATT VARIABLE POWER PA DECK (494-512MHZ)		●	●		●	●	●	●		●		●		●												
SINGLE-TONE DECODER MODULE																										
GUARD TONE DECODER MODULE											●															
F2 TONE DECODER MODULE (C2-R2 CONTROL)																										
SQUELCH CONTROL TONE DECODER MODULE																										
REPEATER CONTROL TONE DECODER MODULE																										
PRIVATE-LINE CONTROL TONE DECODER MODULE																										
"WILD CARD" TONE DECODER CONTROL MODULE																										
F2 TONE DECODER MODULE (PAGING CONTROL)																										
GUARD TONE DECODER MODULE (GT RELAY CONTROL)											●															
BASIC CONTROL CHASSIS																										
FULLY OPTIONABLE CONTROL CHASSIS (2-RCVR BASE)																										
FULLY OPTIONABLE CONTROL CHASSIS (RT REPEATER)																										
STANDARD POWER SUPPLY															●											
BATTERY CHARGER POWER SUPPLY																				●						●

BA
450-4
470-
494-
C

ITEM
TLE2283B
TLE2284B
TLN2442A
TLN2443A
TLN2444A
TLN2445A
TLN2446A
TLN2447A
TLN2448A
TLN2449A
TLN2450A
TLN2472B
TLN2474B
TPN2475B
TPN1191A
TPN1192A

GRB "A" SUFFIX MODELS (BASIC)

GSB "A" SUFFIX MODELS (FULLY OPTIONABLE)

MODEL CHART FOR UHF *MSR 2000*

BASE AND REPEATER (RT) STATIONS

450-470MHZ: 100 TO 50 WATTS VARIABLE RF POWER OUTPUT

470-494MHZ: 85 TO 45 WATTS VARIABLE RF POWER OUTPUT

494-512MHZ: 80 TO 45 WATTS VARIABLE RF POWER OUTPUT

CODE:

- ● = ONE ITEM SUPPLIED
- 2 = INDICATES QUANTITY SUPPLIED
- ▲ = USED IN PLACE OF ONE 10.7MHZ I-F RECEIVER ON TWO RECEIVER STATIONS WITH CERTAIN FREQUENCY COMBINATIONS

C74GRB-6105A

- 5 = DC REMOTE CONTROL
- 6 = TONE REMOTE CONTROL
- 0 = T1-R1
- 1 = T2-R1
- 2 = T2-R2
- 4 = T2-2R (2 RECEIVERS)
- 9 = T4-R4
- 1 = CARRIER SQUELCH
- 3 = PRIVATE LINE CODED SQUELCH
- 6 = DIGITAL PRIVATE-LINE BINARY CODED SQUELCH
- 7 = 100W RF OUTPUT

*REFER TO MODEL BREAKDOWN CHART

CONTROL TYPE	T1=ONE XMIT FREQ T2=TWO XMIT FREQS R1=ONE RCVR FREQ R2=TWO RCVR FREQS 2R=TWO RCVRS ONE FREQ. EACH	TYPE OF SQUELCH	STATION MODEL
	BASE STATIONS		
DC	T1-R1	CARRIER	C74GRB-1105A
TONE	T1-R1	CARRIER	C74GRB-1106A
DC	T2-R1	CARRIER	C74GRB-1115A
TONE	T2-R1	CARRIER	C74GRB-1116A
DC	T2-R2	CARRIER	C74GRB-1125A
TONE	T2-R2	CARRIER	C74GRB-1126A
DC	T1-R1	PL	C74GRB-3105A
TONE	T1-R1	PL	C74GRB-3106A
DC	T2-R1	PL	C74GRB-3115A
TONE	T2-R1	PL	C74GRB-3116A
DC	T2-R2	PL	C74GRB-3125A
TONE	T2-R2	PL	C74GRB-3126A
DC	T1-R1	DPL	C74GRB-6105A
TONE	T1-R1	DPL	C74GRB-6106A
DC	T2-R1	DPL	C74GRB-6115A
TONE	T2-R1	DPL	C74GRB-6116A
DC	T2-R2	DPL	C74GRB-6125A
TONE	T2-R2	DPL	C74GRB-6126A
DC	T1-R1	CARRIER	C74GSB-1105A
TONE	T1-R1	CARRIER	C74GSB-1106A
DC	T2-R1	CARRIER	C74GSB-1115A
TONE	T2-R1	CARRIER	C74GSB-1116A
DC	T2-R2	CARRIER	C74GSB-1125A
TONE	T2-R2	CARRIER	C74GSB-1126A
DC	T2-2R	CARRIER	C74GSB-1145A
TONE	T2-2R	CARRIER	C74GSB-1146A
TONE	T4-R4	CARRIER	C74GSB-1196A
DC	T1-R1	PL	C74GSB-3105A
TONE	T1-R1	PL	C74GSB-3106A
DC	T2-R1	PL	C74GSB-3115A
TONE	T2-R1	PL	C74GSB-3116A
DC	T2-R2	PL	C74GSB-3125A
TONE	T2-R2	PL	C74GSB-3126A
DC	T2-2R	PL	C74GSB-3145A
TONE	T2-2R	PL	C74GSB-3146A
TONE	T4-R4	PL	C74GSB-3196A
DC	T1-R1	DPL	C74GSB-6105A
TONE	T1-R1	DPL	C74GSB-6106A
DC	T2-R1	DPL	C74GSB-6115A
TONE	T2-R1	DPL	C74GSB-6116A
DC	T2-R2	DPL	C74GSB-6125A
TONE	T2-R2	DPL	C74GSB-6126A
DC	T2-2R	DPL	C74GSB-6145A
TONE	T2-2R	DPL	C74GSB-6146A
TONE	T4-R4	DPL	C74GSB-6196A
	REPEATER (RT) STATIONS		
DC	T1-R1	CARRIER	C74GSB-1105AT
TONE	T1-R1	CARRIER	C74GSB-1106AT
DC	T1-R1	PL	C74GSB-3105AT
TONE	T1-R1	PL	C74GSB-3106AT
DC	T1-R1	DPL	C74GSB-6105AT
TONE	T1-R1	DPL	C74GSB-6106AT

FOREWORD

1. SCOPE OF MANUAL

This manual is intended for use by experienced technicians familiar with similar types of equipment. It contains all service information required for the equipment described and is current as of the printing date. Changes which occur after the printing date are incorporated by Instruction Manual Revisions (SMR). These SMR's are added to the manuals as the engineering changes are incorporated into the equipment.

2. MODEL AND KIT IDENTIFICATION

Motorola equipments are specifically identified by an overall model number on the nameplate. In most cases, assemblies and kits which make up the equipment also have kit model numbers stamped on them. When a production or engineering change is incorporated, the applicable schematic diagrams are updated.

3. SERVICE

Motorola's National Service Organization offers one of the finest nation-wide installation and maintenance programs available to communication equipment users. This organization includes approximately 900 authorized Motorola Service Stations (MSS) located throughout the United States, each manned by one or more trained, FCC licensed technicians.

These MSS's are independently owned and operated and were selected by Motorola to service its customers. Motorola maintenance is available on either a time and material basis or on a periodic fixed-fee type arrangement.

The administrative staff of this organization consists of national, area and district service managers and district representatives, all of whom are Motorola employees with the objective to improve the service to our customers.

Should you wish to purchase a service contract for your Motorola equipment, contact your Motorola Service Representative, or write to:

National Service Manager
Motorola Communications and Electronics, Inc.
1303 E. Algonquin Road
Schaumburg, Illinois 60196

Schaumburg, Illinois 60196
This organization includes approximately 900 autho
This organization includes approximately 900 autho
Schaumburg, Illinois 60196

REPLACEMENT PARTS ORDERING

ORDERING INFORMATION

rola maintains a number of parts offices gically-located throughout the United States. : facilities are staffed to process parts orders, fy part numbers, and otherwise assist in the enance and repair of Motorola Communications r products.

's for all parts *except* crystals, active filters, el elements, and Vibrasender and Vibrasponder ant reeds should be sent to the nearest area parts . Orders for instruction manuals should also be o the area parts center.

ordering replacement parts or equipment infor- n, the complete identification number should be ded. This applies to all components, kits, and is. If the component part number is not known, the order should include the number of the chassis or kit of which it is a part, and sufficient description of the desired component to identify it.

Orders for crystals, channel elements, active filters, and reeds should be sent to the Component Product Sales & Service address listed below. Crystal and channel element orders should specify the crystal or channel element type number, crystal and carrier frequency, and the chassis model number in which the part is used.

Orders for active filters, Vibrasender and Vibrasponder resonant reeds should specify type number and frequency, should identify the owner/operator of the communications system in which these items are to be used; and should include any serial numbers stamped on the components being replaced.

COMPONENT PRODUCT SALES & SERVICE OFFICE

il Orders
ola, Inc.
nent Product Sales & Service
ox 66191, O'Hare International Airport
o, IL 60666

Correspondence
Motorola, Inc.
Component Product Sales & Service
2553 N. Edgington Street, Franklin Park, IL 60131
Tel: 312-451-1297, TWX: 910-227-0799, Telex: 433-0067

AREA PARTS OFFICES

n Area Parts
hess Drive, Foster City, CA 94404
5-349-8621, TWX: 910-375-3877

-Southwestern Area Parts
ox 85036, San Diego, CA 92138
Address:
arroll Canyon Road, San Diego, CA 92131
9-578-8030, TWX: 910-335-1516

tates Area Parts
ox 73115, 1140 Cypress Station, Houston, TX 77090
3-537-3636, TWX: 910-881-6392

western Area Parts
ox 34290, 3320 Belt Line Road, Dallas, TX 75234
4-620-8511, TWX: 910-860-5505

st Area Parts
. Algonquin Rd., Schaumburg, IL 60196
2-576-7430, TWX: 910-693-0869

astern Area Parts
ox 368, Decatur, GA 30031
Address:
anola Industrial Blvd., Decatur, GA 30032
4-987-2232, TWX: 810-766-0876

Rocky Mountain Area Parts
20 Inverness Place East, Englewood, CO 80122
Tel: 303-790-2323, TWX: 910-935-0785

East Central Area Parts
12955 Snow Road, Parma, OH 44130
Tel: 216-433-1560, TWX: 810-427-9424

Eastern Area Parts
85 Harristown Road, Glen Rock, NJ 07452
Tel: 201-447-4000, TWX: 710-988-5614

Mid-Atlantic Area Parts
7230 Parkway Drive, Hanover, MD 21076
Tel: 301-796-8763, TWX: 710-862-1941

National Accounts
Railroad, Airlines, and Telephone Sales
1313 E. Algonquin Rd., Schaumburg, IL 60196
Tel: 312-576-6512, TWX: 910-693-0869

All Canadian Orders
Motorola, Ltd., National Parts Department
3125 Steeles, Ave. E., North York, Ontario M2H 2H6
Tel: 416-499-1441, TWX: 610-491-1032,
Telex: 06-526258

National Data Services

West 17th Street, Tempe, AZ 85281
2-994-6472, TWX: 910-951-1334

All Countries Except U.S. & Canada

Motorola, Inc., International Parts Department
1313 E. Algonquin Rd., Schaumburg, IL 60196. U.S.A.
Tel: 312-576-7241, TWX: 910-693-0869
Telex: 722443, Cable: MOTOL PARTS

ATION GENERAL SAFETY INFORMA

States Department of Labor, through the provisions of the Occupational Safety and Health Act of 1970 as established an electromagnetic energy safety standard which applies to the use of this equipment. Proper radio will result in exposure below the OSHA limit. The following precautions are recommended:

OT operate the transmitter of a mobile radio when someone outside the vehicle is within two feet (0.6 of the antenna.

OT operate the transmitter of a fixed radio (base station, microwave and rural telephone rf equipment) or radio when someone is within two feet (0.6 meter) of the antenna.

OT operate the transmitter of any radio unless all RF connectors are secure and any open connectors are ly terminated.

OT operate this equipment near electrical blasting caps or in an explosive atmosphere.

ipment must be properly grounded according to Motorola installation instructions for safe operation.

ipment should be serviced only by a qualified technician.

appropriate section of the product service manual for additional pertinent safety information.

EPS-28750-O

The United (OSHA), h use of this

DO N meter)

DO N marin

DO N prope

In addition

DO N

All eq

All eq

Refer to th

EPS-28750-O

nit PL On/Off (C63 Option)

allows any single frequency base station PL or DPL) squelch to transmit with or L/DPL encoding on the transmitter, at the cretion. A standard paging encoder auto- ıates this function when used in conjunc- a tone console equipped with the g option. This option is not available with y remote control models.

ex Coded Squelch Ta-Rb (C276 Option)

llow the transmit code to be different than de. Available for both PL and DPL.

Channel Elements

on Chart at the front of this manual.

Receiver (C31 Option)

deletes a receiver from station.

Squelch (C140 Option)

operation is a means of using both carrier 'ed with coded (PL or DPL) squelch to ceiver. This allows the user to vary the co- ensitivity with the squelch control. It is es- nmended for use in mixed systems where L) transmitters do not send a reverse burst e) at the end of each transmission. This annoying squelch tail being heard at the squelch is not recommended for normal nce when the mobile may be in a fading

istor switch
o relay kits
dry contact
ised to turn
may have at
nctions are

(RT) mod-
r. The cabi-
part of this

model, pro-
cabinet size
s option.

2.2 OPTIONS AVAILABLE FOR FULLY OPTIONABLE VERSIONS ONLY

2.2.1 4-Reed Multiple *Private-Line*(C158, C261, C262, C263 Options)

These Options provide 4-PL tone code capability and are equipped with Vibrasender and/or Vibrasponder resonant reeds, as required.

2.2.2 TLN2442A Single-Tone Decoder

This module may be used for additional security for repeaters or for repeater selection in multiplerepeater systems. By addition of the TLN4151A Relay Kit, other functions can be controlled by this module. This option is not available with four-frequency remote control models.

2.2.3 Mute 2nd Receiver (C56 Option)

This Option allows the user to selectively mute or unmute the 2nd receiver, (R2) for extended periods of time. Normally, R1 automatically mutes R2 (R1 priority) when R1 is "active" in the standard two-frequency transmit, two-receiver stations.

2.2.4 Remote Squelch Set (C13 Option)

This Option allows selection of station receiver squelch to either of two pre-adjusted settings.

2.2.5 Wild Card (C15 Option)

This Option is a module that may be used for any elec- trically operated function. It provides trans outputs, or, with the addition of one or tw (TLN4151A) will provide two form "C" outputs. These Wild Card outputs can be on and off any auxiliary equipment the user or near his station site. Normally, these fu activated by the remote control console.

2.1.6 Trans

This Option with coded (without the F operator's di matically act tion with correspondin four-frequen

2.1.7 Simpl

This Option the receive c

2.1.8 Omit

Refer to Opt

2.1.9 Omit

This Option

2.1.10 AND

AND Squelc squelch AN operate the r ded squelch s pecially reco some PL (D (turn-off co results in an mobile. AN PL performa signal area.

2.1.11 Four-Wire Audio Line Driver (C144 Option)

This Option provides a separate audio line capability for duplex operation or two-receiver audio routing.

2.1.12 Indoor 29" Cabinet (C92 Option)

This Option replaces an indoor 24" cabinet.

2.1.13 TLN5935A Extender Card

This Option adds a service aid.

2.1.14 Shield Kits (C116 Option)

Provides full shield covers for base stations only. Included on repeater and two-receiver models as a standard feature.

2.2.6 Two-Cavity Duplexer (C181 Option)

This Option, when ordered with a repeate ule, provides an in-cabinet 2-cavity duplex net size required is a 29" version, and is Option.

2.2.7 4-Cavity Duplexer (C182 Option)

This Option, when ordered with a repeater vides an in-cabinet 4-cavity duplexer. The required is a 29" version, and is part of th

2.2.8 Receiver PL On††Off (C14 Option)

This Option provides remote control of receive PL on/off. With receiver PL off, station reverts to carrier squelch operation.

2.2.9 *Spectra-TAC* Encoder (C269 Option)

This Option includes 4-wire audio operation. The *Spectra-TAC* encoder module sends a status tone down the control lines when the station receiver is squelched. The signal is used by a *Spectra-TAC* comparator (in a *Spectra-TAC* system) to effect a voting of receivers.

2.2.10 TKN8281A Internal Interface Cable

This ten-conductor cable allows routing of available control signals from the backplane interconnect board to an auxiliary control connector (D-type) on the station junction box. A blank, mating connector is also provided for use with external cable construction.

2.2.11 Repeater Control (C143 Option)

This Option provides repeater Set-Up/KnockDown control, activated by the remote control console equipped with the corresponding option.

2.2.12 RA Base Option (C150 Option)

This Option provides the required equipment to a station (a squelch gate module) to enable it to key a co-located companion RA repeater, when a message is received from a mobile station by the RA base station. An RA base/RA repeater station pair, when used with a distant control station, form the rf link of a "radio repeater (RA) system".

2.2.13 RA Repeater Operation (C160 Option)

This Option provides the required equipment to a station to enable it to key (via squelch action) a co-located companion RA base, when a message is received from a control station by the RA repeater station.

2.2.14 Guard Tone Keying Operation (C170 Option)

This Option provides the required equipment to an RA repeater to enable it to immediately key (via guard tone detection) a co-located companion RA base, when a message is received from a control station by the RA repeater station. Additionally, this Option enables the control station to operate the RA base station in a tone-controlled, multi-frequency, multi-function environment.

2.3 OPTION AVAILABLE FOR BASIC VERSIONS ONLY

- Local Desk Set (C24 Option)
  This Option allows local operation of a DC control station.

3. MAINTENANCE

Maintenance of UHF stations is the same as described in the accompanying Instruction manual 68P81061E50, except for frequency (450-512 MHz) and rf power considerations. Table 1 provides a list of recommended test equipment for maintenance of UHF stations. Figures 1 through 4 provide the additional mechanical parts identification photographs necessary for UHF stations. Also, refer to the station Simplified Block Diagram and RF Intercabling Diagram for unique UHF station parts lists.

Table 1. Recommended Test Equipment

Type of Equipment or Type of Measurement	**Equipment Characteristics**	**Recommended Type**
Transmitter Frequency Measurement	Frequency — 450-512 MHz Accuracy — ±.00002% or better	Any of the following Test Equipment: Model R2400 Series System Analyzer Model R2001 Series System Analyzer Model S1035 Series Frequency Counter & Deviation Meter
Transmitter Deviation Measurement	Peak reading type for voice or sinusoidal wave; scales for accurate reading of ±5 kHz deviation (and ±1 kHz deviation for *Private-Line*models)	Any of the following Test Equipment: Model R2400 Series System Analyzer Model R2001 Series System Analyzer Model S1035 Series Frequency Counter & Deviation Meter
Transmitter Power Output Measurement	450-512 MHz; 50 ohms: at least 0-125 watts. 50 ohms dummy load: at least 125 watts.	Model R2400 Series System Analyzer Model R2001 Series System Analyzer S1350 Series Wattmeter with appropriate element Model T1013 Series RF Load Resistor
RF Signal Generator for receiver testing	450-512 MHz; FM; high-stability (±.0002% or. better); adjustable output 0 to 1000 microvolts	Model R2400 Series System Analyzer Model R2001 Series System Analyzer Model R1040 Signal Generator
Audio Voltage Measurements	High impedance (10 megohm); dBm scale	Model S1053 Series Solid State AC Voltmeter
Audio Signal Generator for audio circuit testing in receiver and transmiter	Variable amplitude 0 to 1 volt; 1 kHz tone (300 to 3000 Hz preferred); sinusoidal wave	Model R2400 Series Service Monitor Model R1150 Series Solid State Audio Oscillator
DC Voltage Measurements, Resistance Measurements, RF Voltage Measurements	High impedance (11 megohm) DC multimeter	Model R1047 Series Digital Multimeter Model R1024 Solid State DC Multimeter with RTL4103 RF Probe
Waveform Measurements	Oscilloscope:	Model R1029 Dual Trace Oscilloscope Audio Circuit Measurements: Model R1004 Series Oscilloscope RF Circuit Measurements: A very high quality instrument is required (at least 50 MHz bandwidth)
Tone *Private-Line* injection for PL decoder circuit measurements *Digital Private-Line* Encoder and Decoder measurements	*Private-Line* tone generator using Vibrasender resonant reed for frequency accurancy; or audio oscillator with frequency counter for accurate setting of oscillator. *Digital Private-Line* Encoder and Decoder. Also test digital code plugs	Model R-1150 Series *Private-Line* Tone Generator Model R1150 Series Code Synthesizer
Tuning Tool	Used for adjusting all tunable components during equipment alignment.	Motorola Part No. 66-83398A01 & 66-82977K01
Contact Removal Tool	Used to remove female wire terminals from metering cable connector	Motorola Part No. 66-84690C01

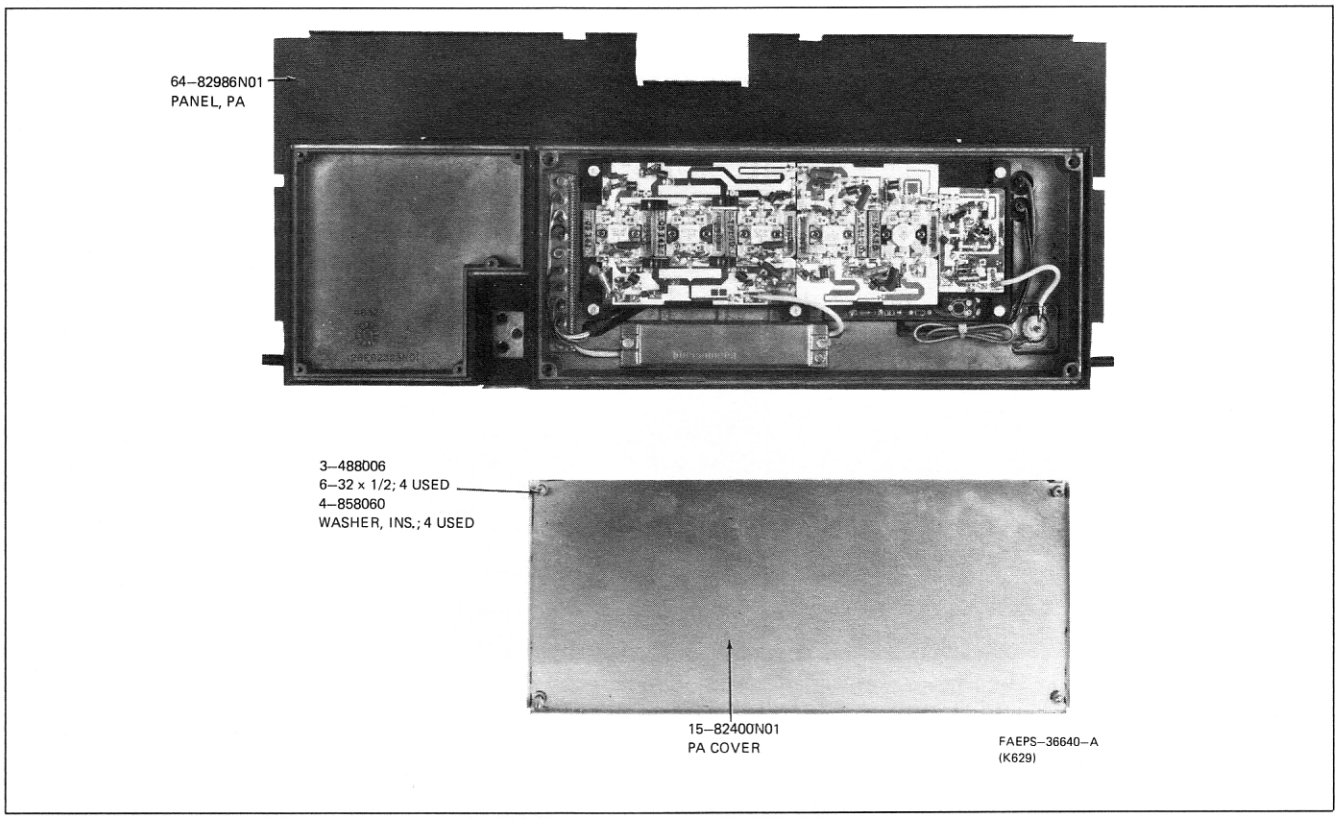

Figure 1. UHF Power Amplifier Deck Detail

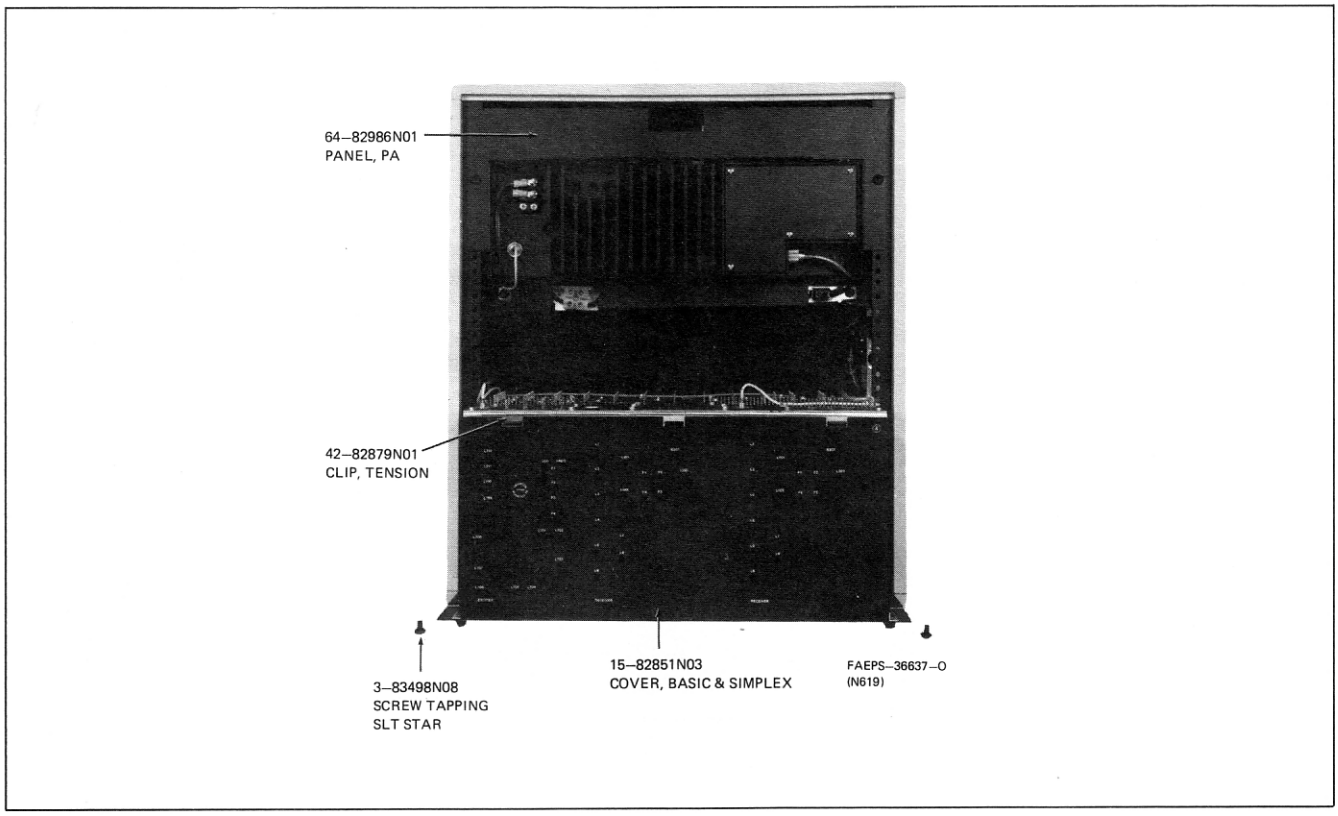

Figure 2. UHF Basic Version Front Detail

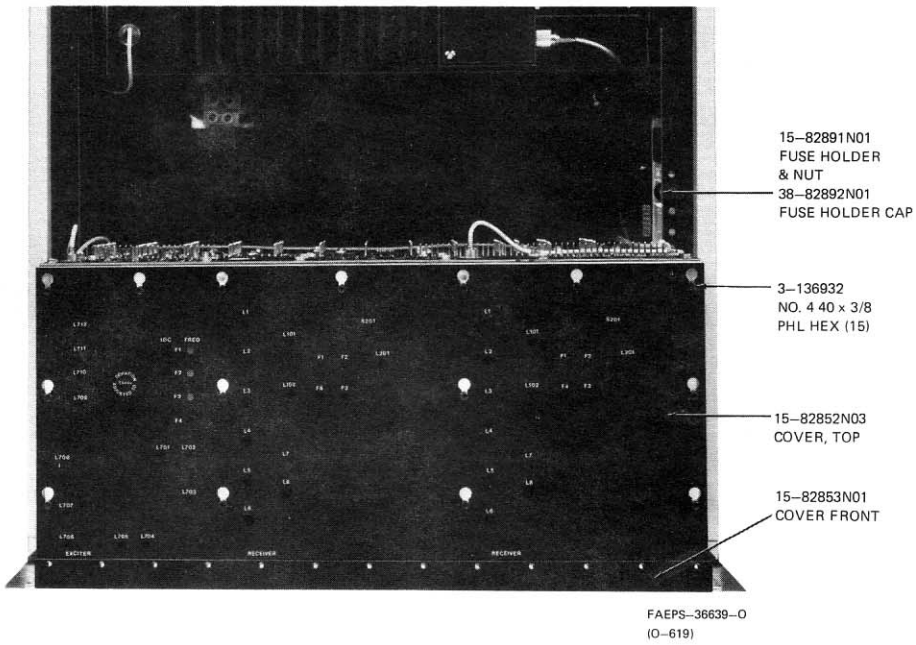

Figure 3. UHF Fully Optionable Version Front Detail

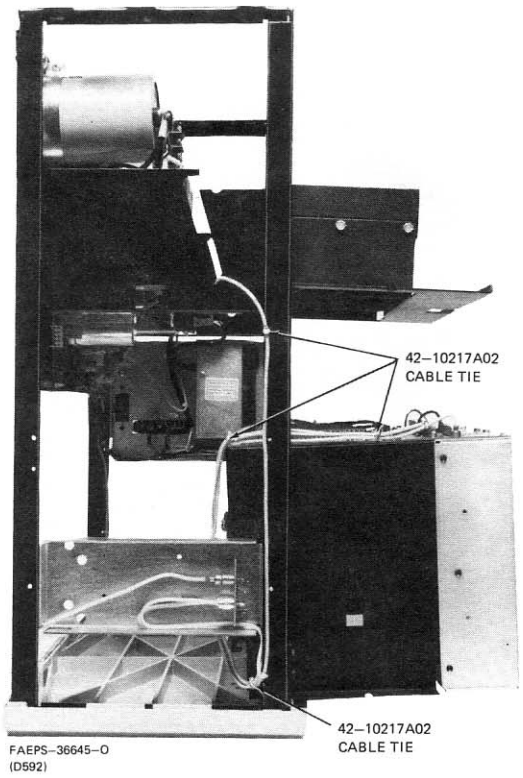

Figure 4. UHF Station Side View Detail

parts list

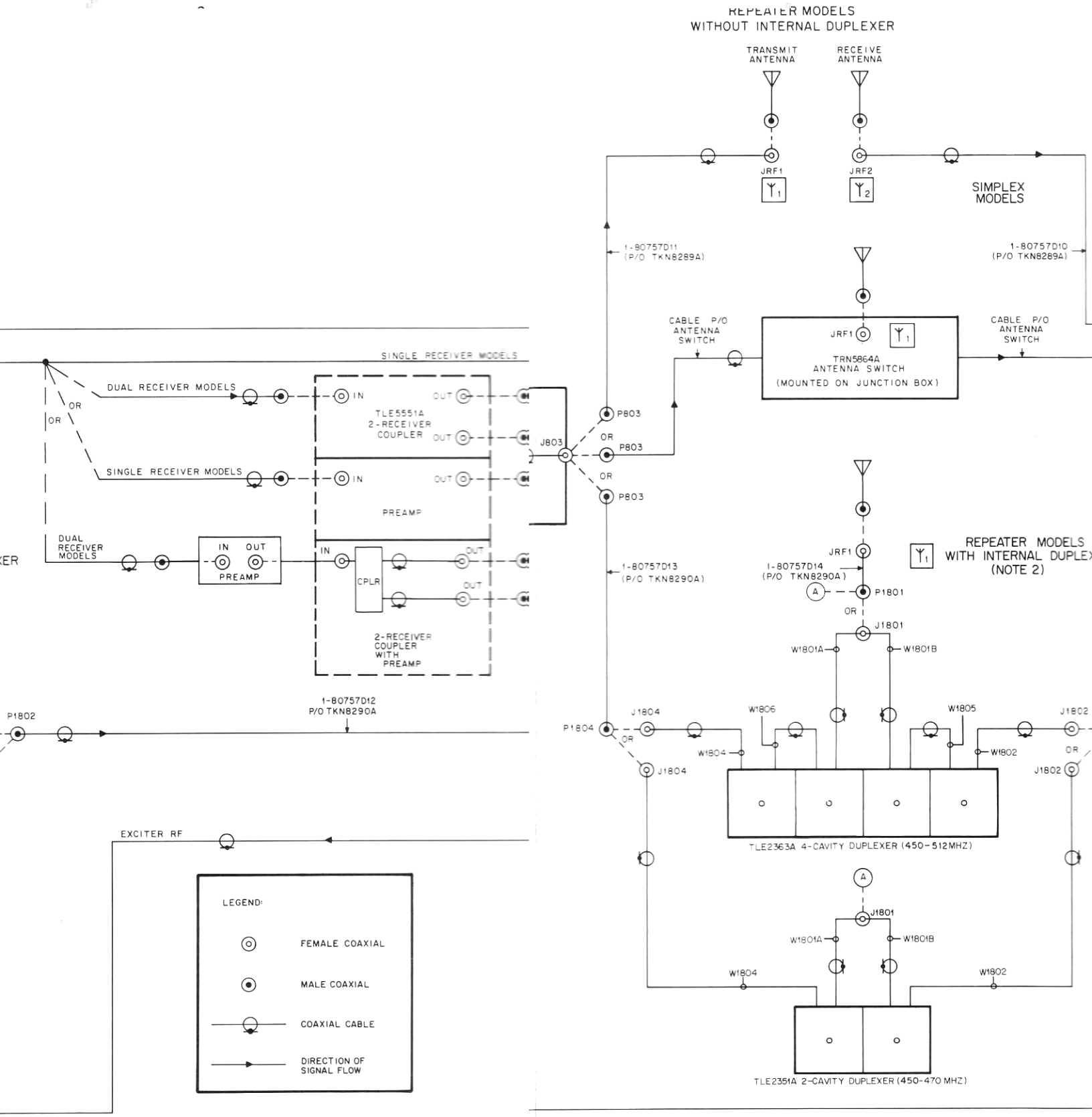

del TLE5551A Two

2363A Duplexers.

NOTES:

1. Cables associated with two receiver coupler are part of Mod Receiver Coupler Kit.

2. Duplexer interconnection cables are part of TLE2351A or TLE Refer to Duplexer Instruction section of this manual.

section of this manual.

Table 1. UHF Receiver Model Table

Model	Frequency (MHz)	Description	Application
TRE6262A	450-470	Multi-Frequency 10.7 MHz I-F	Normally used with all stations.
TRE6263A	470-512		
TRE6272A	450-470	Multi-Frequency 10.8 Mhz I-F	Used with 2-Receiver stations where shifted I-F is required.
TRE6273A	470-512		

Table 2. Performance Specifications

Input Impedance	50 ohms
Number of Channels	1, 2, 3, or 4
Frequency Separation	2 MHz
I-F Frequency	10.7 MHz or 10.8 MHz
EIA Modulation Acceptance	±7 kHz Minimum
Frequency Stability	±.0002% from -30°C to +60°C ambient (+25°C reference)
Channel Spacing	25 kHz
Sensitivity: 20 dB Quieting EIA SINAD	 Less Than 0.5 uV Less Than 0.35 uV
Selectivity: EIA SINAD	90 dB
Intermodulation: EIA SINAD	85 dB (minimum)
Spurious and Image Rejection*	100 dB (Minimum)
*In receivers tuned for 1 to 2 MHz widespace frequency separation, the 1/2 i-f spur degrades to 90 dB.	

SPECIFICATIONS SUBJECT TO CHANGE WITHOUT NOTICE

pole filter Y204-Y205, final matching circuitry, and limiter/detector U202.

2.5 LIMITER/DETECTOR

Limiter/Detector U202 is a 16-pin monolithic integrated circuit that internally includes three stages of i-f amplification for limiting, a quadrature fm detector, audio preamplifier, and alignment metering output. The recovered audio output of approximately 500 mV is applied to a audio buffer amplifier Q202, which provides the 250 mV receiver detected audio level required by the R1 (or R2) audio board in the control package.

2.6 9.5 VOLT REGULATOR

The regulated 9.5 volts and 13.8 volts provided to the receiver from the station power supply are applied to Q104 and Q105, resulting in a highly regulated and filtered 9.5 volts. This highly regulated 9.5 volts is supplied to the receiver channel elements, quadrature detector U202, and audio preamplifier Q202 to assure good receiver hum and noise performance.

2.7 DELAYED KEYED A+

This circuit (Q102) provides for disabling of the receiver channel element while the base station is in the transmit mode and prevents audio feed back to the receiver.

3. MAINTENANCE

Malfunctions in the receiver can be localized by using the optional built-in station metering kit or connecting a Motorola portable test set to the receiver metering receptacle and making stage measurements. The meter readings may be compared to the values shown on the receiver functional diagram, but preferably, a log of readings should be maintained for reference. Each new set of readings should then be compared to previous readings. An abrupt change in a meter reading indicates a circwhile a gradual change in a reading may indicate an impending failure which cabecomes marginal. Table 3 provides a list of test equipment recommended for use while servicing UHF receivers.

4. RECEIVER FUNCTIONAL TESTS

4.1 AUDIO AND SQUELCH TEST

The receiver and R1 audio board should provide 1 watt of audio when the VOLUME control on the R1 audio board is set fully clockwise and a strong carrier signal is received that is modulated ±3 kHz devation with a 1000 Hz tone. When the rf input signal is reduced to minimum and the SQUELCH control on the R1 audio board is set at theshold, the speaker should be quieted. Increasing the rf input signal a small amount should again produce noise in the speaker. With coded squelch models, no audio should be heard from the speaker unless the rf input signal has the proper encoded PL or DPL signals. These circuits may be checked as follows:

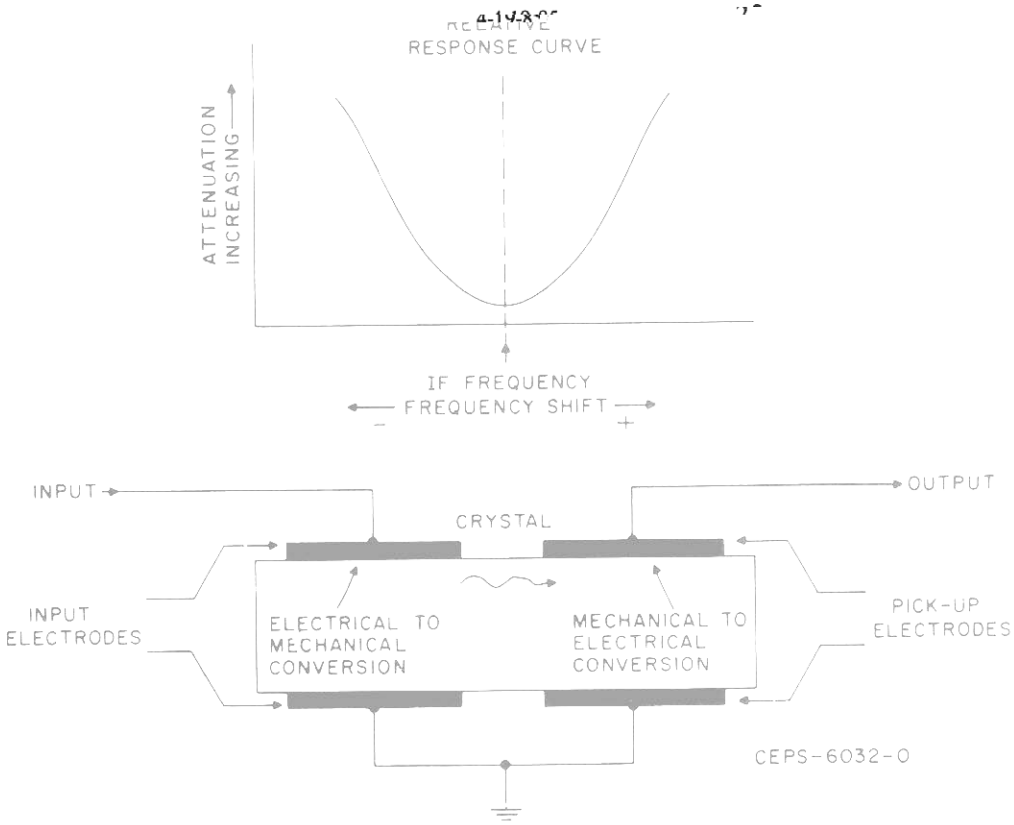

Figure 1. Simplified Piezoelectric Coupling Diagram

Step 1. PL disable station. Connect speaker to test connector on the backplane interconnect board. Adjust the signal generator for 1000 uV input to the receiver, modulated with 1000 Hz tone at ±3 kHz deviation.

Step 2. Connect an ac voltmeter to measure the voltage between pins 1 and 2 of the CONTROL metering socket.

Step 3. Set the VOLUME control on the R1 audio board fully clockwise. The ac voltmeter should indicate at least 2.8 volts rms.

Step 4. Decrease the signal generator output to minimum. Remove modulation from signal generator.

Step 5. Set the SQUELCH control at threshold, that is, turn it clockwise until the noise just quiets.

Step 6. Increase the signal generator output slightly until the noise is again heard in the speaker. No more than 0.2 uV should be required.

Step 7. On coded squelch models, enable the PL function. No noise should be heard in the speaker.

Step 8. Modulate the rf signal with the proper PL or DPL signals, with ±500 Hz deviation. Adjust signal generator output until noise is again heard in speaker. No more than 0.2 uV should be required. (Refer to the Audio and Squelch tab of the Control and Audio Instruction manual for further squelch explanation).

4.2 20 dB QUIETING TEST

With no signal input and the receiver unsquelched, noise should be heard in the speaker or indicated on position 11 of the portable test set (function selector switch in RCVR position). When a carrier frequency signal is injected, the noise should decrease. No more than 0.5 uV should be required to decrease the noise 20 dB. This may be checked as follows:

Step 1. Unsquelch receiver by turning the SQUELCH control on the R1 audio board fully counterclockwise. PL disable the receiver.

	Minimum Specifications
	Measurement range: 0-15 V dc Sensitivity: 20,000 ohms/volts
	Measurement range: 0-15 V dc Input resistance: 11 megohms
	Measurement range: 0-10 V ac Input resistance: 10 megohms
	Vertical sensitivity: 5mV 10 V/division Horizontal time base 0.2 usec. 0.5 sec/division
q-	Measurement range: 450-512 MHz Frequency resolution: 10 Hz
	Frequency range: 450-512 MHz Output Level: 0.1 uV-100,000 uV Must be capable of at least ±3 kHz deviation when modulated by 1 kHz tone
	Frequency range: 20 Hz-20 kHz Output level: 50 mV-1 V
	Frequency range: 10 Hz-9999 Hz Output level: 0-3 V rms
r a K-	
	1-20 V dc 0-40 A

eplaced by the Motorola R2001
be used for alignment purposes.

NOTE (Cont'd.)
a good conductive path to continuity test should indicate ohm between the crystal filter receiver circuit board ground bad ground connection may in gain measurements.

eceiver alignment is essential for n measurement. Perform a complete as provided on the attached Alignge of this section.

the Receiver Functional Block Diagram, and circuit board detail while ocedure.

and adjust an rf signal generator o the receive channel frequency. Adgenerator output to provide the reut voltage for a particular test point.

Table 3. Recommended Test Equipment For UHF Rece

General Type	Application	Recommended Model
AC-DC VOM	DC voltage measurements, general	Motorola T1009
DC Multimeter	DC voltage readings requiring a high input resistance meter	Motorola S1063
AC voltmeter	Audio voltage measurements	Motorola S1053
Oscilloscope	Waveform observation	Motorola R1004
Frequency Meter	Receiver frequency measurement	Model R1200 Service Monitor with high stability oscillator (X suffix) option. Fre uency calibration recommended every 6 months or less.
RF Signal Generator	Receiver alignment and troubleshooting	Motorola R1200 Service Monitor with attenuator
Audio Signal Generator	Audio circuit troubleshooting	Motorola S1067
PL Tone Generator*	Tone-coded *Private-Line* decoder troubleshooting	Motorola S1333
DPL Test Set**	*Digital Private-Line* encoder-decoder troubleshooting	Motorola SLN6413
Radio Test Set	Meter readings at circuit metering points for for alignment and troublehsooting	Motorola S1056 Portable Test Set with a TEK-37 or TEK-37A Test Set Adapter o Motorola TEK-5 Meter Panel with a TE 40 (MICOR Adapter) Cable.
DC Power Supply	DC Power for shop service	Motorola R1011

* Required for tone-coded *Private Line* models only.
** Required for *Digital Private-Line* models only.

NOTE
All test equipment, with the exception of the DPL test set and dc power supply, may be r System Analyzer. Tuning tools Motorola Part No. 66-82977K01 and 66-83398A01 should b

Step 2. Set the function selector switch on the portable test set to the RCVR position and the selector switch to position 11.

Step 3. Adjust VOLUME control on the R1 audio board for noise in the speaker and a reading on the test set meter. A reading of 1.5 V ac is a convenient reference value to use.

Step 4. Connect an rf signal generator (set to the receiver carrier frequency) to the antenna input connector.

Step 5. Beginning with minimum signal level, increase the signal generator output until the meter 11 reading drops to 1/10 the reference value in Step 3, that is 0.15 V ac. No more than a 0.5 uV output from the signal generator should be required to quiet the receiver.

4.3 RECEIVER GAIN MEASUREMENTS

NOTE
Before making any receiver gain measurements, make sure the case of every crystal

filter has a ground. A c less than 1 c case and the plating. A cause errors

Step 1. Proper r proper receiver gai receiver alignment ment Procedure pa

Step 2. Refer to gram, schematic di performing this pr

Step 3. Attached output frequency t just the rf signal quired receiver inp

Then, using an rf ac voltmeter, measure the rf signal voltage between the test point and a nearby chassis ground point. At every test point, the measured voltage should be within ±6 dB of the given value.

5. TROUBLESHOOTING TECHNIQUES

5.1 VISUAL INSPECTION

The first step in the troubleshooting procedure should be a thorough visual inspection of the receiver and, in particular, the receiver board. Corrosion, burned or damaged components are usually easily seen and may be the cause or a symptom of the receiver malfunction. An improperly installed receiver shield can cause a degradation in receiver performance.

After the "obvious" problems have been corrected, repeat the receiver functional tests. If the tests still produce unsatisfactory results, refer to the receiver troubleshooting chart attached to this section. The troubleshooting chart provides a systematic procedure for isolation of a defective stage and component.

5.2 ALIGNMENT AS A TROUBLESHOOTING TECHNIQUE

Low meter readings, and otherwise abnormal performance of the receiver are very often corrected by realignment. Therefore, alignment should be one of the first troubleshooting steps performed for these symptoms.

5.3 TROUBLESHOOTING INTEGRATED CIRCUITS

Integrated circuits (IC) are very reliable components and should not be replaced unless it is definitely indicated that the IC is the defective component. Before replacing an IC, make sure that the external components in the circuit are normal. The IC's on the receiver board may be checked by dc voltage measurements. Refer to schematic diagram for correct voltages.

5.4 TROUBLESHOOTING CRYSTALS

A defective filter crystal can best be found by performing an i-f gain check per the schematic diagram. A defective crystal will show an abnormally high insertion loss. If the crystal is found to be defective because of high insertion loss or an ungrounded case, it should be replaced.

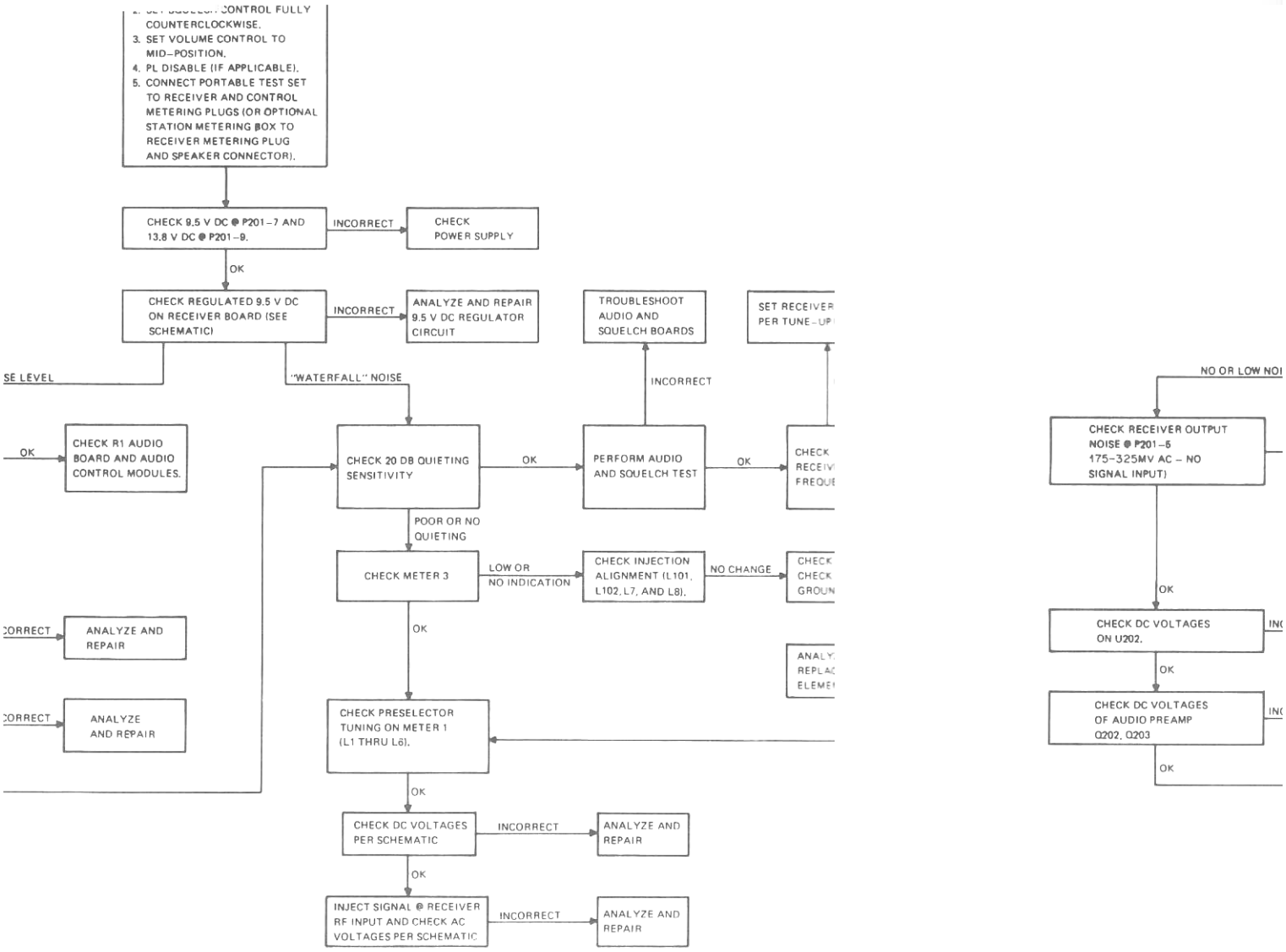
CONTROL FULLY COUNTERCLOCKWISE.
3. SET VOLUME CONTROL TO MID–POSITION.
4. PL DISABLE (IF APPLICABLE).
5. CONNECT PORTABLE TEST SET TO RECEIVER AND CONTROL METERING PLUGS (OR OPTIONAL STATION METERING BOX TO RECEIVER METERING PLUG AND SPEAKER CONNECTOR).
CHECK 9.5 V DC @ P201–7 AND 13.8 V DC @ P201–9.
INCORRECT
CHECK POWER SUPPLY
OK
CHECK REGULATED 9.5 V DC ON RECEIVER BOARD (SEE SCHEMATIC)
INCORRECT
ANALYZE AND REPAIR 9.5 V DC REGULATOR CIRCUIT
TROUBLESHOOT AUDIO AND SQUELCH BOARDS
SET RECEIVER PER TUNE–UP
SE LEVEL
"WATERFALL" NOISE
INCORRECT
NO OR LOW NOI
OK
CHECK R1 AUDIO BOARD AND AUDIO CONTROL MODULES.
CHECK 20 DB QUIETING SENSITIVITY
OK
PERFORM AUDIO AND SQUELCH TEST
OK
CHECK RECEIV FREQUE
CHECK RECEIVER OUTPUT NOISE @ P201–5 175–325MV AC – NO SIGNAL INPUT)
POOR OR NO QUIETING
CHECK METER 3
LOW OR NO INDICATION
CHECK INJECTION ALIGNMENT (L101, L102, L7, AND L8).
NO CHANGE
CHECK CHECK GROUN
OK
CORRECT
ANALYZE AND REPAIR
ANALY REPLA ELEME
OK
CHECK DC VOLTAGES ON U202.
IN
OK
CORRECT
ANALYZE AND REPAIR
CHECK PRESELECTOR TUNING ON METER 1 (L1 THRU L6).
CHECK DC VOLTAGES OF AUDIO PREAMP Q202, Q203
IN
OK
OK
CHECK DC VOLTAGES PER SCHEMATIC
INCORRECT
ANALYZE AND REPAIR
OK
INJECT SIGNAL @ RECEIVER RF INPUT AND CHECK AC VOLTAGES PER SCHEMATIC
INCORRECT
ANALYZE AND REPAIR

UHF RECEIVER
MODEL SERIES TRE6260A, 70A

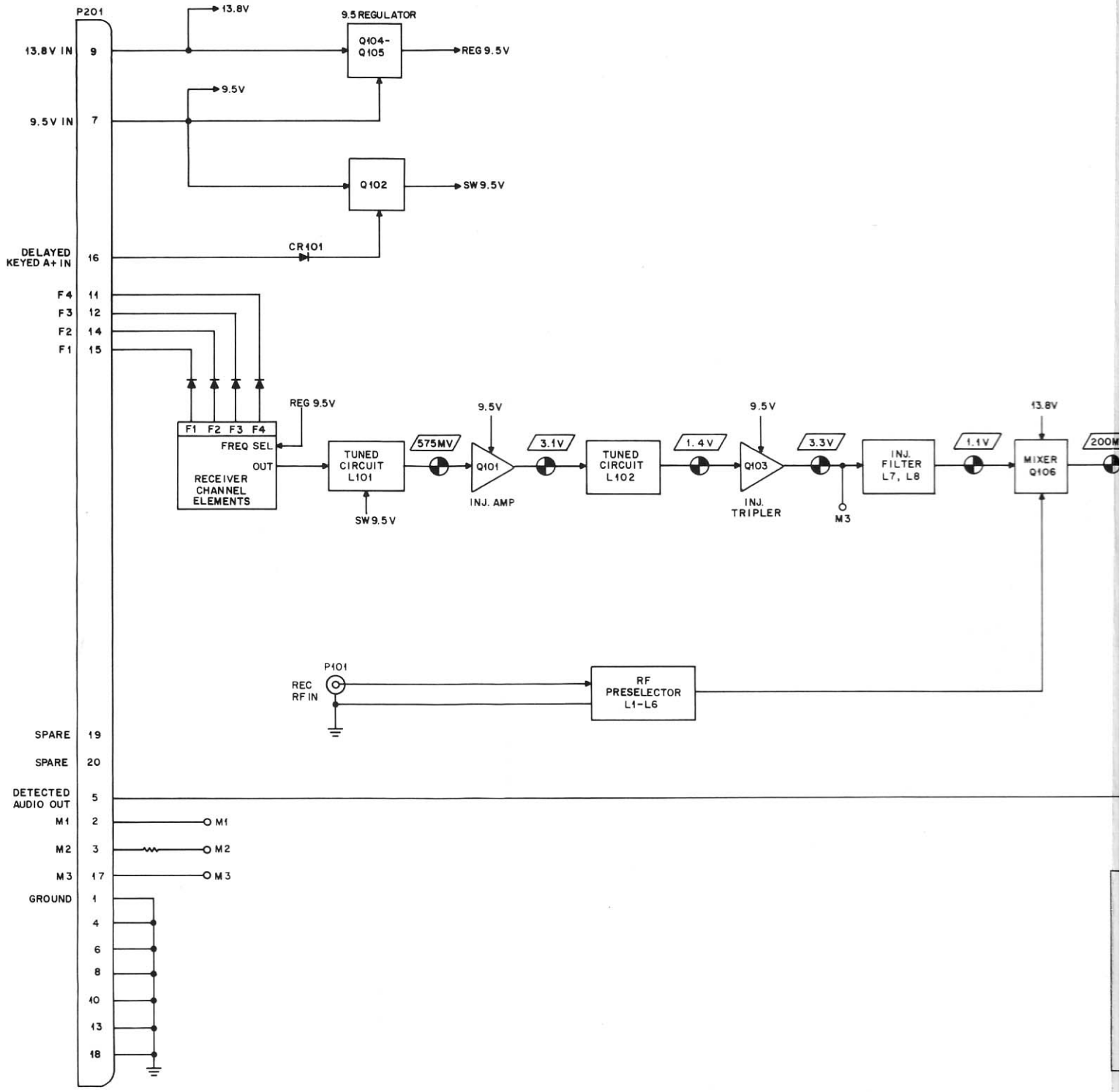

Functional Block Diagram
Motorola No. ***PEPS-41770-A***
(Sheet 2 of 2)
11/15/85-PHI

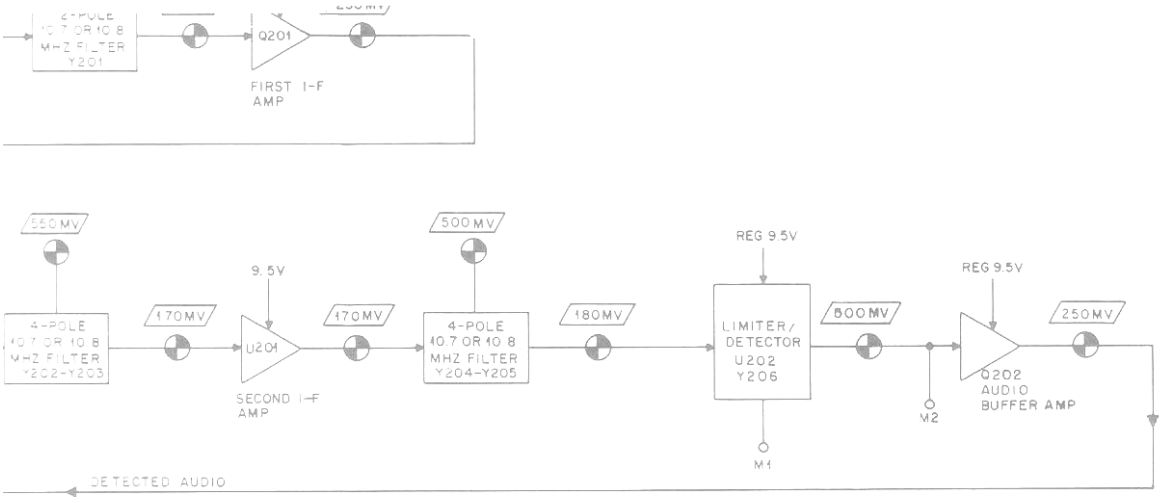

DEPS - 44728-A

DEPS - 44728-A

UHF RECEIVER
MODEL SERIES TRE6260A, 70A

parts list

legend:
M = TRE6262A, 72A: 450-470 MHz
H = TRE6263A, 73A: 470-512 MHz

TRE6262A, 63A 10.7 MHz I-F, Receiver
TRE6272A, 73A 10.8 MHz I-F, Receiver

PL-9668-O

REFERENCE SYMBOL	MOTOROLA PART NO.	DESCRIPTION
		capacitor, fixed: pF ±5%; 50 V: unless otherwise stated
C101	21-11021H06	.033 uF +80+20%
C102M	21-845014	3.9 ±0.25; N750
C102H	21-82355B34	3.0 ±0.25; N750
C103	21-11022G08	2 ±0.25
C104	21-82610C23	6.8 ±0.5
C105	21-11021H06	.033 uF +80+20%
C106	21-11021E05	220 ±10%
C107	21-11021E01	100 ±10%
C108	21-11021E13	.001 uF ±10%
C109M	21-82610C15	5; N750
C109H	21-845014	3.9 ±0.25; N750
C110	21-83406D54	4 ±0.25
C111	21-83406D65	5 ±0.25
C112	21-11022G18	5.1 ±0.5
C113	23-11019A16	4.7 uF ±20%; 35 V
C114, 115	21-11021E13	.001 uF ±10%
C116	21-82450B37	0.47 uF; 500 V
C117	21-11021E05	220 ±10%
C118	21-11022G23	7 ±0.5
C119	21-82372C10	.05 uF ±20%
C120	21-11022G23	7 ±0.5
C121	21-11022G35	16
C122	21-11022G37	20
C123	23-11019A40	47 uF ±20%; 25 V
C124	21-11021E05	220 ±10%
C125	21-11022G38	22
C126	21-83406D65	5 ±0.25
C127	21-11022G27	9 ±0.5
C128	21-11022G30	10 ±0.5
C129	23-11019A46	100 uF ±20%; 25 V
C130 thru 133	21-11021E05	220 ±10%
C134	23-11019A46	100 uF ±20%; 25 V
C135	21-11021H06	.033 uF +80+20%
C136	23-11019A46	100 uF ±20%; 25 V
C137	21-11021H06	.033 uF +80-+20%
C201	21-82450B07	0.39; 500 V
C202	21-11022G45	43
C203	21-11022G40	27
C204 thru 207	21-11021H06	.033 uF +80+20%
C208	21-11022G44	39
C209	21-11022G41	30
C213	21-82450B44	0.82; 500 V
C216	21-11022G40	27
C217	21-11022G45	43
C218 thru 222	21-11021H06	.033 uF +80+20%
C223	21-11014H42	51; 100 V
C224	21-11022G38	22
C225	21-11022G39	24
C226	21-82450B44	0.82; 500 V
C227	21-82450B17	2.2; 500 V
C231	21-11022G41	30
C232	21-11022G44	39
C233 thru 235	21-11021H06	.033 uF +80+20%
C236	21-11022G17	4.7 uF ±0.25
C237	21-11022G25	8 uF ±0.5
C238	21-11022G31	11 uF ±5%
C239, 240	21-11021H06	.033 uF +80+20%
C241	21-11021H06	.033 uF ±5%
C242	21-11021H06	.033 uF +80+20%
C243	21-11021E21	.0047 uF ±10%
C244	8-11017A06	.0047 uF ±5%
C247	23-11019A27	22 uF ±20%; 25 V
C248 thru 260	21-11021E13	1000
		diode: (see note)
CR101	48-83654H01	silicon
CR102	48-82139G01	germanium
CR103 thru 110	48-83654H01	silicon
CR111	48-83654H02	silicon
		connector, plug:
JU104 thru 107	28-80096A01	male; 4-contact
		coil, rf:
L1 thru 8	1-80766D56	preselector, injection filters; 450-470 MHz (TRE6162A, 72A)
	or 1-80766D57	preselector, injection filters; 470-512 MHz (TRE6163A, 73A)
L101	24-80065A01	4-1/2 turns (RED)
L102	24-80065A05	4-1/2 turns (BLU)
L103	24-82723H28	choke; 0.29 uH
L104, 105	24-82549D42	choke; 10 uH
L106	24-82835G25	choke; 1.5 uH
L107	1-80775D46	1-3/4" short stub (450-470 MHz)
	or 1-80775D47	1-5/16" short stub (470-512 MHz)
L108	24-82835G41	choke; 5.6 uH
L109	24-82723H04	choke; 0.29 uH
L110	24-83397L11	choke; 30 uH
L111	24-83397L08	choke; 15 uH

Circuit Board Detail and Parts List
Motorola No. ***PEPS-41729-O***
(Sheet 1 of 2)
4/29/85-PHI

REFERENCE SYMBOL	MOTOROLA PART NO.	DESCRIPTION
L202	24-83397L07	choke; 10 uH
L203	24-82723H03	choke; 23 uH
L204, 205	24-83397L07	choke; 10 uH
L206	24-82723H03	choke; 23 uH
L207	24-83397L08	choke; 15 uH
L208	24-83397L07	choke; 10 uH
L209	24-82723H03	choke; 23 uH
L210 thru 222	24-83961B01	choke; 3 turns (BRN)
L230	24-11047B58	choke; 24 uH
L231	24-83397L07	choke; 10 uH
		connector, receptacle:
P101	9-84135B02	female
P200, 201	9-83497F05	female; 10-contact
		transistor: (see note)
Q101	48-869932	NPN; type M9932
Q102	48-869643	PNP; type M9643
Q103	48-84411L09	NPN; type M1109
Q104	48-869642	NPN; type M9642
Q105	48-84411L10	PNP; type M1110
Q106	48-869839	FET; type M9839
Q201	48-869494	NPN; type M9494
Q202	48-869643	PNP; type M9643
		resistor, fixed: ± 5%; 1/4 W: unless otherwise stated
R101, 102	6-11009A49	1k
R103	6-11009A57	2.2k
R104	6-11009A45	680
R105	6-11009A24	91
R106	6-11009A71	8.2k
R107	6-11009A73	10k
R108	6-11009A40	430
R109	6-11009A73	10k
R110	6-125A19	56; 1/2 W
R111	6-11009A77	15k
R112	6-11009A39	390
R113	6-11009A01	10
R114	6-11009A61	3.3k
R115	6-11009A81	22k
R116	6-125A19	56; 1/2 W
R201	6-11009A79	18k
R202	6-11009A49	1k
R203	6-11009A87	39k
R204	6-11009A37	330
R205	6-11009A11	27
R206	6-11009A54	1.6k
R207	6-11009A93	68k
R208	6-11009A35	270
R209, 210	6-11009A93	68k
R211	6-11009A35	270
R212	6-11009A93	68k
R213	6-11009A41	470
R214	6-11009A01	10k
R215	6-11009A61	15k
R216	6-11009A73	10k
R217	6-11009A65	4.7k
R218	6-11009A49	1k
R219	6-11009A94	75k
R220	6-11009A73	10k
R221	6-11009B02	150k
R222	6-11009A65	4.7k
		integrated circuit: (see note)
U201	51-83629M05	second i-f amplifier
U202	51-84561L84	quad detector
		crystal:
Y201	91-80011E04	10.7 MHz (TRE6262A, 63A)
	or 48-84396K07	10.8 MHz (TRE6272A, 73A)
Y202 thru 206	91-80011E05	10.7 MHz (TRE6262A, 63A)
	or 48-84396K06	10.8 MHz (TRE6272A, 73A)
		mechanical parts
	2-80045A02	NUT; M8 × 1.25; 6 used
	2-80045A03	NUT; M6 × 1mm; 2 used
	3-3375	SCREW, tapping: 6-20 × 5/16"; 18 used
	3-80012A03	SCREW, set
	3-80256A01	SCREW, set
	3-84256M01	SCREW, tapping
	5-84220B01	GROMMET, panel; 8 used
	15-84638N01	PLATE, bottom
	26-80062C01	SHIELD, IC
	26-80121A01	SHIELD, can; 5 used
	26-80144B03	SHIELD, mixer
	26-80196A01	SHIELD, coil; 2 used
	26-82871N01	SHIELD, quad
	26-83347N01	SHIELD, 2nd i-f
	26-84991N01	SHIELD
	45-83824N01	CARD, ejector; 2 used
	64-82174P01	PLATE, mixer cover
	75-05295B01	INSULATOR, xtal; 6 used

note: For optimum performance, diodes, transistors, and integrated circuits must be ordered by Motorola part numbers.

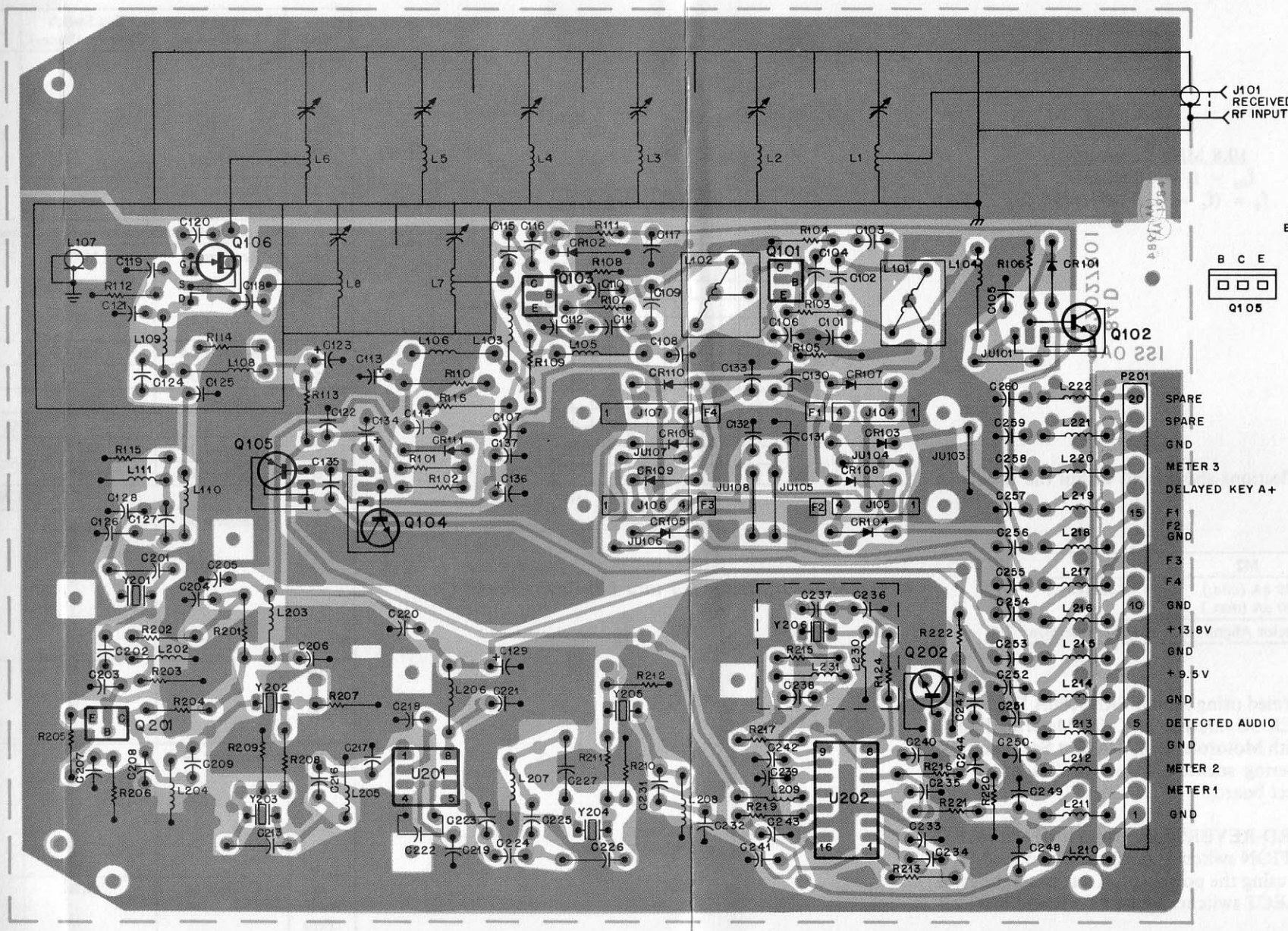

COMPONENT SIDE ● BD- CEPS- 41697-0
SOLDER SIDE ● BD- CEPS- 41698-0
OL -CEPS- 41699-0

SHOWN FROM COMPONENT SIDE

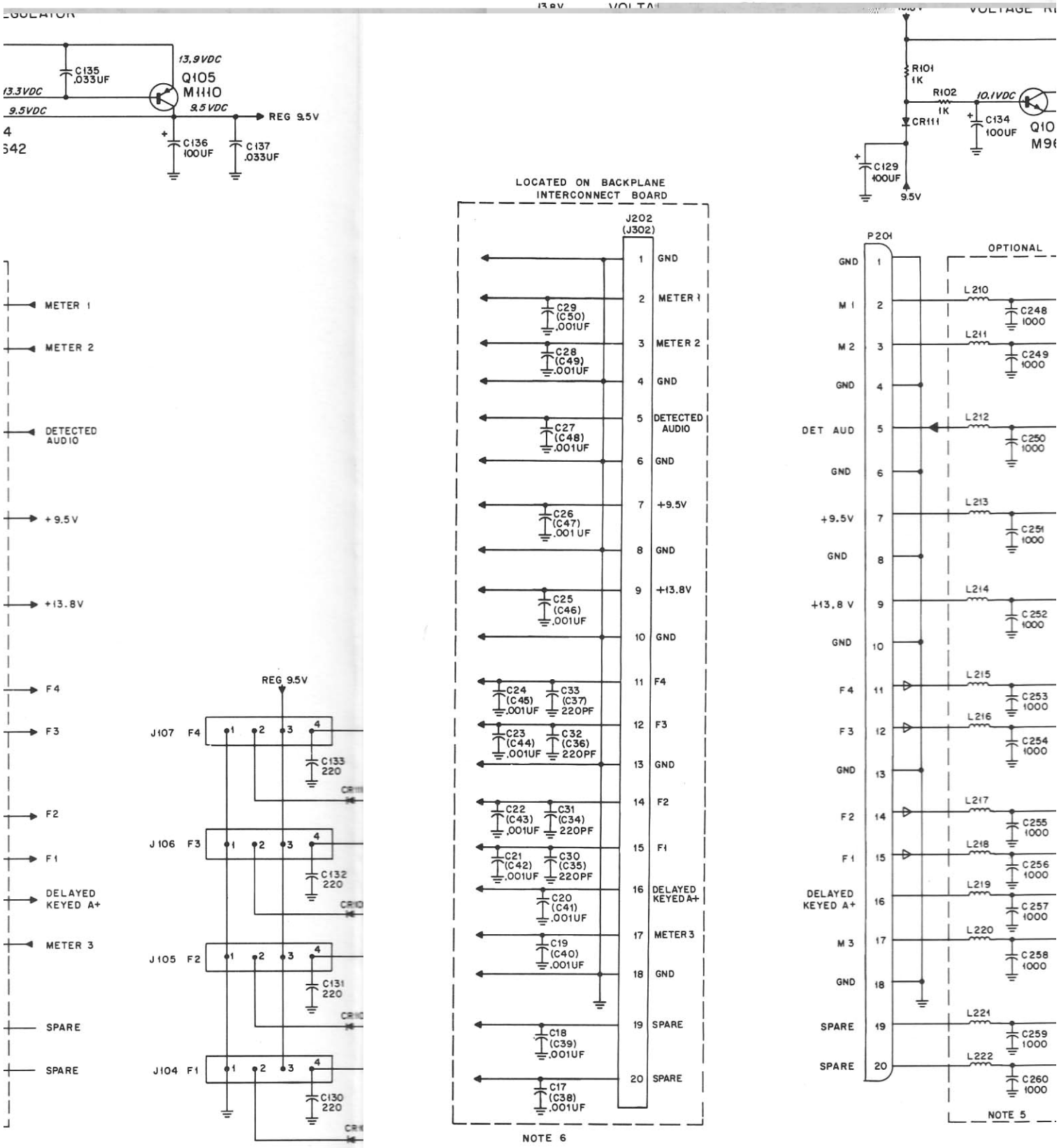
13.9VDC
Q105
M1110
C135
.033UF
13.3VDC
9.5VDC
9.5VDC
REG 9.5V
C136
100UF
C137
.033UF
R101
1K
R102
1K
10.1VDC
CR111
C134
100UF
C129
100UF
9.5V
LOCATED ON BACKPLANE
INTERCONNECT BOARD
J202
(J302)
1 GND
2 METER 1
3 METER 2
4 GND
5 DETECTED AUDIO
6 GND
7 +9.5V
8 GND
9 +13.8V
10 GND
11 F4
12 F3
13 GND
14 F2
15 F1
16 DELAYED KEYED A+
17 METER 3
18 GND
19 SPARE
20 SPARE
C29 (C50) .001UF
C28 (C49) .001UF
C27 (C48) .001UF
C26 (C47) .001 UF
C25 (C46) .001UF
C24 (C45) .001UF
C33 (C37) 220PF
C23 (C44) .001UF
C32 (C36) 220PF
C22 (C43) .001UF
C31 (C34) 220PF
C21 (C42) .001UF
C30 (C35) 220PF
C20 (C41) .001UF
C19 (C40) .001UF
C18 (C39) .001UF
C17 (C38) .001UF
NOTE 6
P201
OPTIONAL
GND 1
M 1 2
M 2 3
GND 4
DET AUD 5
GND 6
+9.5V 7
GND 8
+13.8 V 9
GND 10
F4 11
F3 12
GND 13
F2 14
F1 15
DELAYED KEYED A+ 16
M 3 17
GND 18
SPARE 19
SPARE 20
L210
L211
L212
L213
L214
L215
L216
L217
L218
L219
L220
L221
L222
C248 1000
C249 1000
C250 1000
C251 1000
C252 1000
C253 1000
C254 1000
C255 1000
C256 1000
C257 1000
C258 1000
C259 1000
C260 1000
NOTE 5
METER 1
METER 2
DETECTED AUDIO
+9.5V
+13.8V
F4
F3
F2
F1
DELAYED KEYED A+
METER 3
SPARE
SPARE
REG 9.5V
J107 F4
C133 220
J106 F3
C132 220
J105 F2
C131 220
J104 F1
C130 220

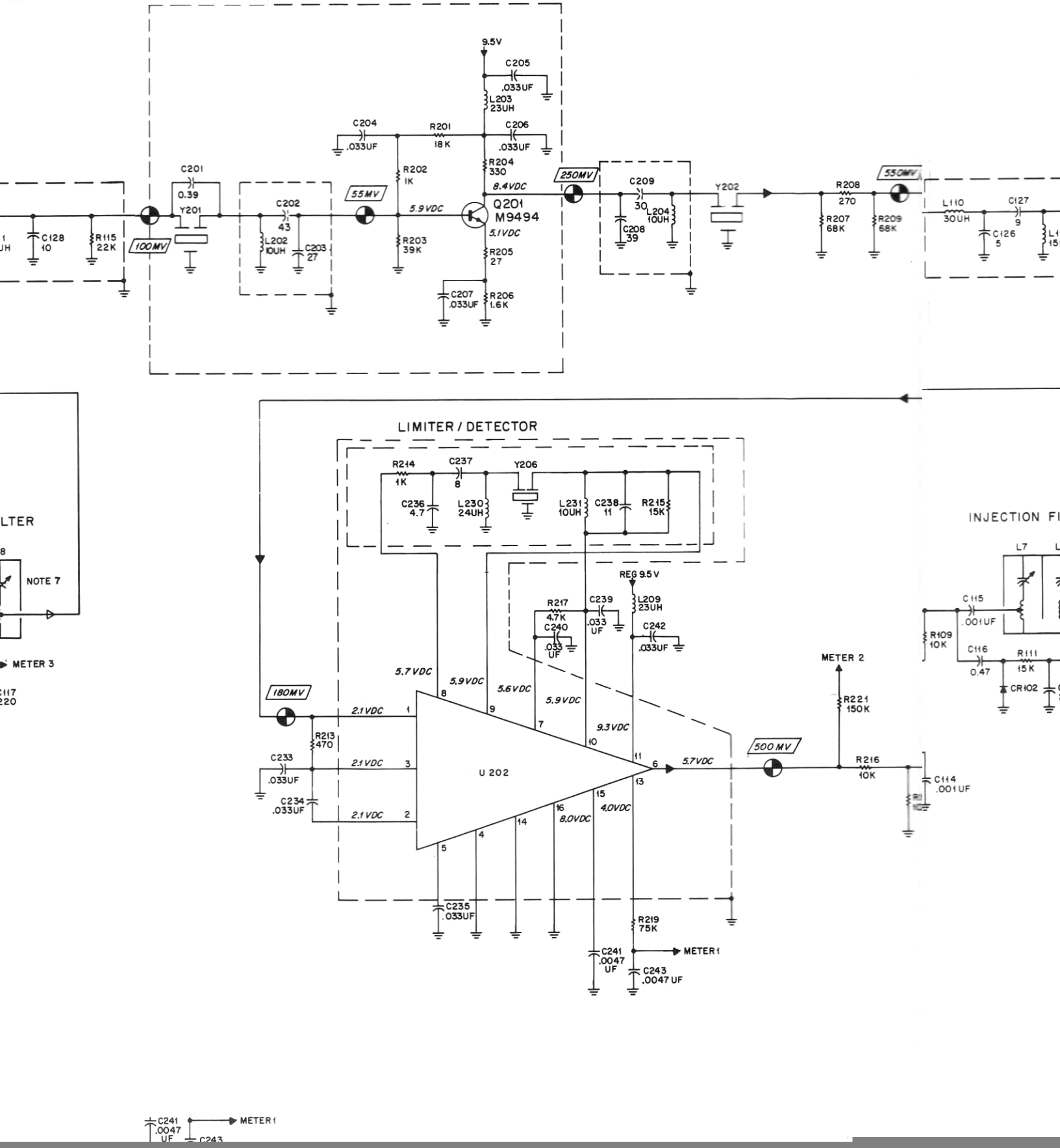
9.5V
C205
.033UF
L203
23UH
C204
.033UF
R201
18K
C206
.033UF
R204
330
C201
0.39
Y201
C202
43
L202
10UH
C203
27
R202
1K
55MV
5.9VDC
8.4VDC
Q201
M9494
5.1VDC
R203
39K
R205
27
C207
.033UF
R206
1.6K
250MV
C209
30
C208
39
L204
10UH
Y202
R208
270
R207
68K
R209
68K
550MV
L110
30UH
C127
9
C126
5
C128
10
R115
22K
100MV
LIMITER / DETECTOR
R214
1K
C237
8
Y206
C236
4.7
L230
24UH
L231
10UH
C238
11
R215
15K
REG 9.5V
R217
4.7K
C239
.033
UF
L209
23UH
C240
.033
UF
C242
.033UF
5.7VDC
5.9VDC
5.6VDC
5.9VDC
9.3VDC
180MV
2.1VDC
R213
470
C233
.033UF
2.1VDC
C234
.033UF
2.1VDC
U 202
5.7VDC
500MV
METER 2
R221
150K
R216
10K
C114
.001UF
4.0VDC
8.0VDC
C235
.033UF
R219
75K
C241
.0047
UF
METER 1
C243
.0047 UF
INJECTION FI
L7
C115
.001UF
R109
10K
C116
0.47
R111
15K
CR102
LTER
NOTE 7
METER 3
C117
220
C241
.0047
UF
METER 1
C243

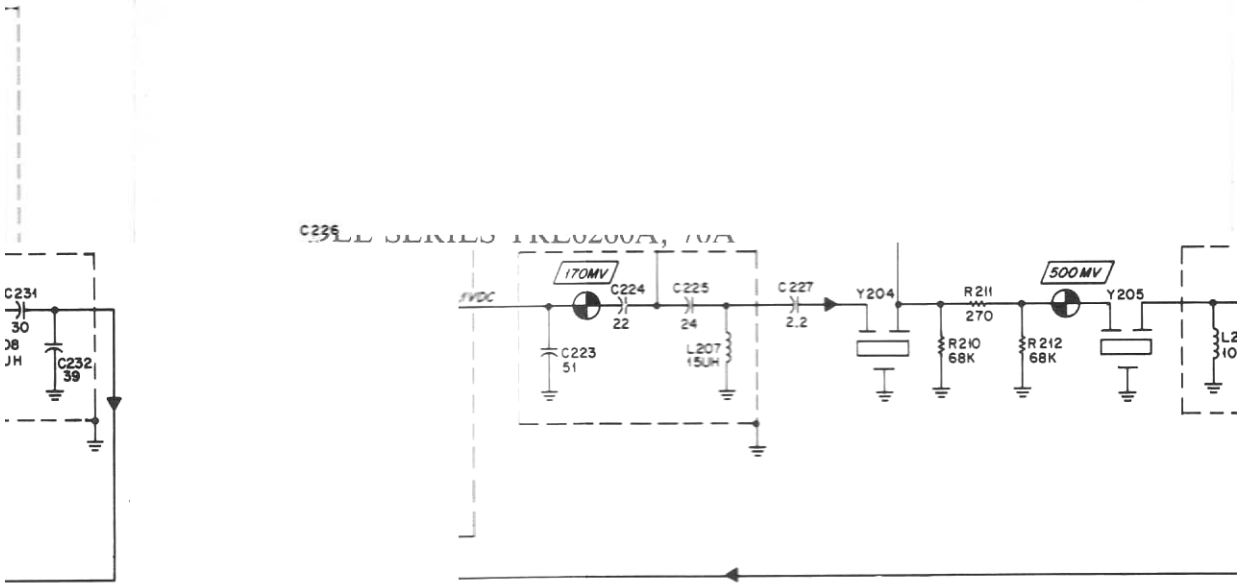

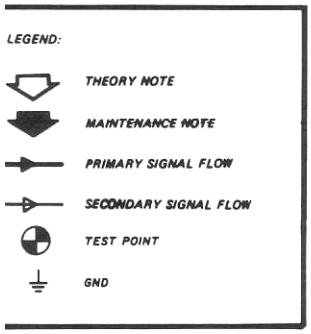

NOTES

1. Unless otherwise indicated resistor values are in ohms; capacitor values are in picofarads.
2. Integrated circuits on this board are linear devices.
3. IC types and connections for this board are as follows:

Reference Designation	VCC	Gnd
U201	8	4
U202	11	4, 14

4. Jumper Installation.

	Function
JU101	Out For Simplex Operation; In For RPTR Operation
JU103	In on Single Frequency Radios (To Enable F1 Channel Element)
JU104 JU105 JU106 JU107 JU108	As required to bus 2 or more channel select lines to a single channel element when these channels use the same receiver frequency.

5. TRE6262A, TRD6263A, TRE6272A, and TRE6273A use C248 thru C260 and L210 thru L222 as shown.
6. Connector J202 and bypass capacitors C17-C29 and C30-C33 used for R1 receiver position on interconnect board. Component designators shown in ( ) used for R2 receiver position on interconnect board.
7. Frequency range sensitive parts, values shown are for 450-470 MHz radio. See parts list for 470-512 MHz radios.

Kit	Description	Frequency Range
TRE6262A	Receiver 10.7 MHz I-F, Filtered	450-470 MHz
TRE6272A	Receiver 10.8 MHz I-F, Filtered	450-470 MHz
TRE6263A	Receiver 10.7 MHz I-F, Filtered	470-494 MHz
TRE6273A	Receiver 10.8 MHz I-F, Filtered	470-494 MHz

UHF RECEIVER

Schematic Diagram
Motorola No. PEPS-41729-O
(Sheet 2 of 2)
4/29/85-PHI

UHF RECEIVER
MODEL TRE6160A, 70A SERIES

1. DESCRIPTION

1.1 Table 1 provides a model chart of the UHF receivers. These receivers are fully transistorized units that receive FM signals on one to four crystal-controlled frequencies. In a multi-frequency receiver, only one frequency can be received at a time.

1.2 Each receiver includes an rf preselector, mixer, local oscillator injection circuitry, high gain selective i-f stages, quadrature detector, audio preamplifier, and a low-ripple 9.5 volt regulator. The receiver develops a low noise audio signal from a frequency modulated "on-channel" rf carrier in the 450-512 MHz range.

1.3 All circuits are constructed on a single plug-in circuit board which is easily accessible for servicing. The receiver plugs into the backplane interconnect board which provides all dc, audio, and rf connections thereby eliminating all interconnecting wiring. All alignment points are accessible through the top of the rf compartment cover. Table 2 provides the UHF receiver performance specifications. Refer to the attached Receiver Functional Block Diagram for signal flow.

2. THEORY OF OPERATION

Refer to the attached Receiver Schematic Diagram and Circuit Board Detail, at the end of this section, for circuit details.

2.1 RF PRESELECTOR

Received carrier rf is connected, via P101, to the 6-pole helical resonator rf preselector filter (L1 thru L6). The steep skirted rf preselector filter has a bandwidth of 2 MHz and ultimate rejection of 100 dB. The output of the preselector (L6) is connected to the gate of an N-channel JFET mixer, Q106.

2.2 LOCAL OSCILLATOR AND INJECTION

Plug in crystal oscillator modules (channel elements) provide a stable, temperature compensated frequency which is applied to injection amplifier Q101. Each receiver is capable of receiving up to four distinct frequencies. The output of Q101 (typical gain of 15 dB) is applied to the base of Q103, which triples the frequency. The output of Q103 passes through L7 and L8, a 2-pole helical bandpass filter, which attenuates harmonics of the injection frequency. A typical injection level of + 10 dBm is coupled to the source of mixer Q106.

2.3 MIXER

Excellent intermodulation immunity is provided by mixer, Q106. The filtered receive input and injection signal are applied to the gate and source respectively. The output at the drain is applied to impedance matching circuitry which emphasizes the difference frequency applied to the i-f circuitry. Both the mixer and the following impedance matching circuitry are shielded.

2.4 I-F CIRCUITRY

2.4.1 Several stages of filtering and amplification are employed in the i-f circuitry. Selective i-f filtering is accomplished using dual-resonator, mode coupled monolithic crystals cut to a fundamental frequency of 10.7 MHz or 10.8 MHz. Due to the inherent piezoelectric properties of the crystal material, input signals selectively produce mechanical vibrations which propagate through the device. At the output the same piezoelectric

Table 1. UHF Receiver Model Table

Model	Frequency (MHz)	Description	Application
TR6162A	450-470	Multi-Frequency 10.7 MHz I-F	Normally used with all stations.
TRE6163A	470-512		
TRE6172A	450-470	Multi-Frequency 10.8 Mhz I-F	Used with 2-Receiver stations where shifted I-F is required.
TRE6173A	470-512		

property selectively converts the mechanical vibrations into the i-f electrical signal.

2.4.2 Refer to Figure 1. The high "Q" of the crystals create steep skirts which result in excellent on-channel intelligibility and off-channel signal rejection. The i-f circuitry requires no tuning and makes extensive use of shielding.

2.4.3 The first crystal filter is a single 2-pole device, Y201. This stage is followed by a matching network, 16 dB discrete amplifier Q201, additional matching, and 4-pole filter Y202-Y203. The output of the first 4-pole filter is applied to a matching network and then to high gain (approximately 50 dB) 2nd i-f amplifier U201. The output of U201 is applied to matching circuitry, a 2nd 4-pole filter Y204-Y205, final matching circuitry, and limiter/detector U202.

2.5 LIMITER/DETECTOR

Limiter/Detector U202 is a 16-pin monolithic integrated circuit that internally includes three stages of i-f amplification for limiting, a quadrature fm detector, audio preamplifier, and alignment metering output. The recovered audio output of approximately 80 mV is applied to discrete audio preamplifier Q202-Q203, which provides the 250 mV receiver detected audio level required by the R1 (or R2) audio board in the control package. Adjustment of the quadrature detector is provided by L201.

2.6 9.5 VOLT REGULATOR

The regulated 9.5 volts and 13.8 volts provided to the receiver from the station power supply are applied to Q104 and Q105, resulting in a highly regulated and filtered 9.5 volts. This highly regulated 9.5 volts is supplied to the receiver channel elements, quadrature detector U202, and audio preamplifier Q202 to assure good receiver hum and noise performance.

2.7 DELAYED KEYED A+

This circuit (Q102) provides for disabling of the receiver channel element while the base station is in the transmit mode and prevents audio feed back to the receiver.

3. MAINTENANCE

Malfunctions in the receiver can be localized by using the optional built-in station metering kit or connecting a Motorola portable test set to the receiver metering receptacle and making stage measurements. The meter readings may be compared to the values shown on the receiver functional diagram, but preferably, a log of readings should be maintained for reference. Each new set of readings should then be compared to previous readings. An abrupt change in a meter reading indicates a circwhile a gradual change in a reading may indicate an impending failure which cabecomes marginal. Table 3 provides a list of test equipment recommended for use while servicing UHF receivers.

4. RECEIVER FUNCTIONAL TESTS

4.1 AUDIO AND SQUELCH TEST

The receiver and R1 audio board should provide 1 watt of audio when the VOLUME control on the R1 audio board is set fully clockwise and a strong carrier signal is received that is modulated ±3 kHz devation with a 1000 Hz tone. When the rf input signal is reduced to minimum and the SQUELCH control on the R1 audio board is set at theshold, the speaker should be quieted. Increasing the rf input signal a small amount should again produce noise in the speaker. With coded squelch

Table 2. Performance Specifications

Input Impedance	50 ohms
Number of Channels	1, 2, 3, or 4
Frequency Separation	2 MHz
I-F Frequency	10.7 MHz or 10.8 MHz
EIA Modulation Acceptance	±7 kHz Minimum
Frequency Stability	±.0002% from -30°C to +60°C ambient (+25°C reference)
Channel Spacing	25 kHz
Sensitivity: 20 dB Quieting EIA SINAD	 Less Than 0.5 uV Less Than 0.35 uV
Selectivity: EIA SINAD	90 dB
Intermodulation: EIA SINAD	85 dB (minimum)
Spurious and Image Rejection*	100 dB (Minimum)
*In receivers tuned for 1 to 2 MHz widespace frequency separation, the 1/2 i-f spur degrades to 90 dB.	

SPECIFICATIONS SUBJECT TO CHANGE WITHOUT NOTICE

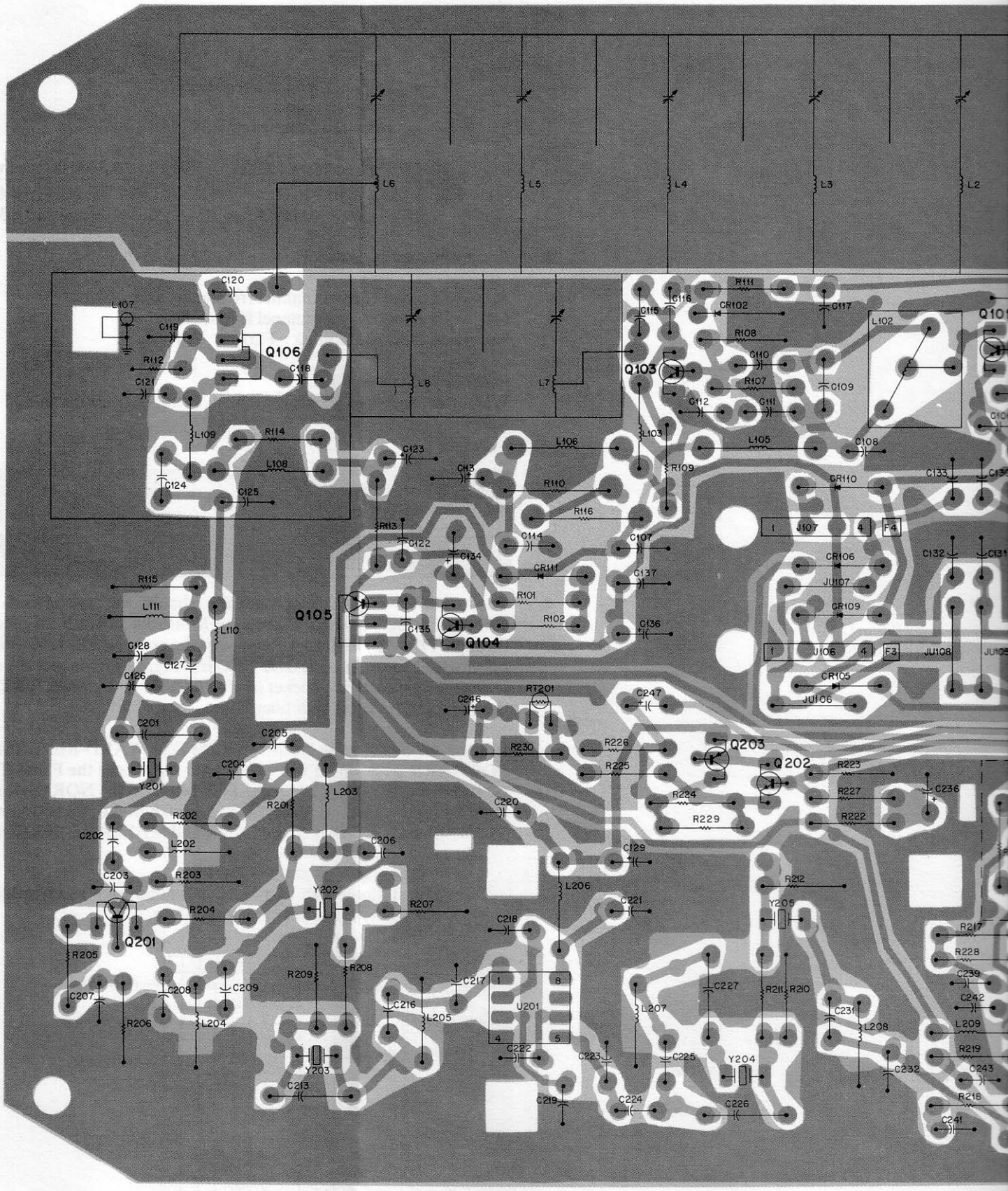

SHOWN FROM COMPONENT SIDE

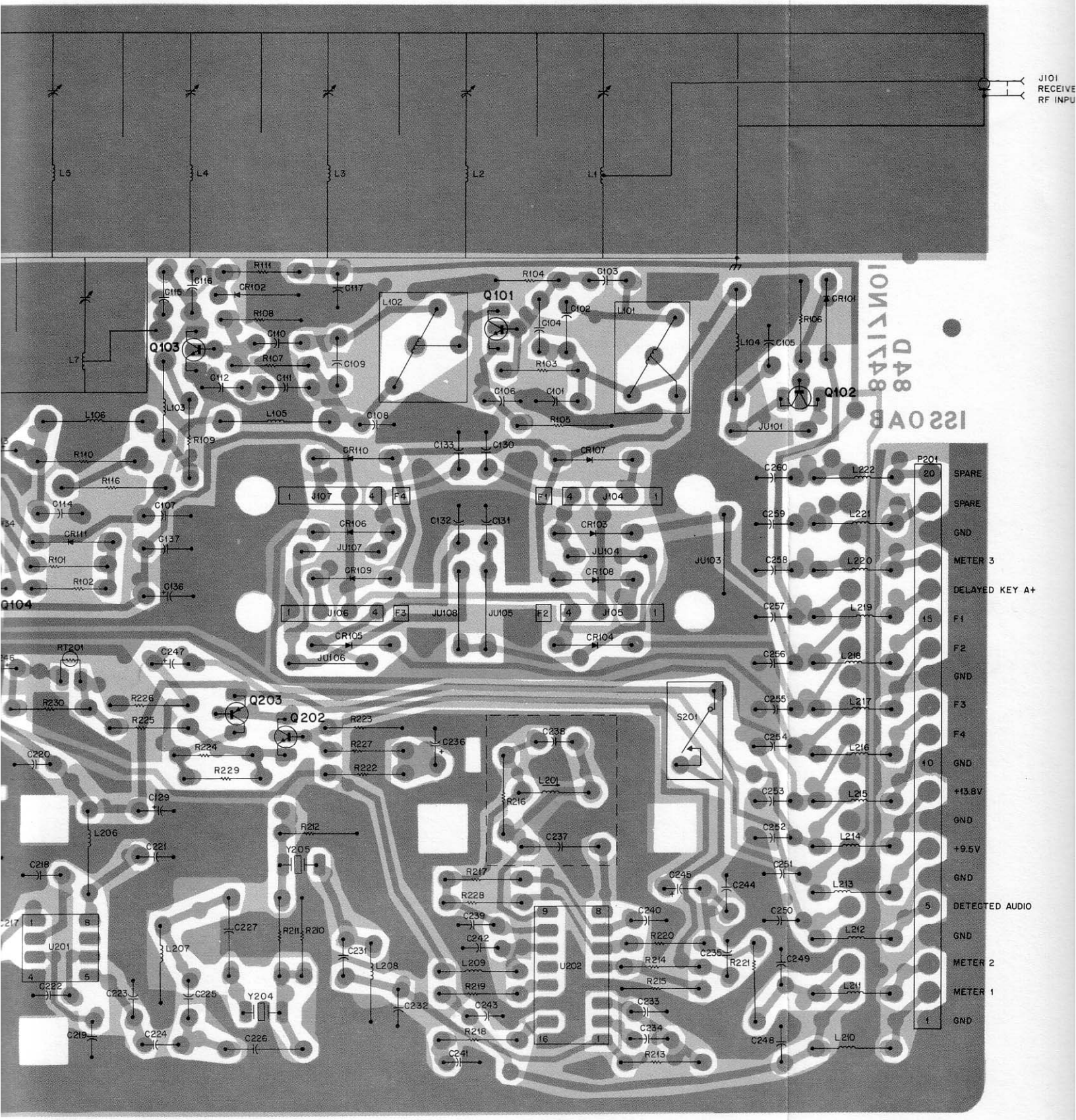

N FROM COMPONENT SIDE

SOLDER SIDE BD-EEPS-36678-0
COMPONENT SIDE BD-EEPS-36677-0
OL BD-EEPS-36676-0

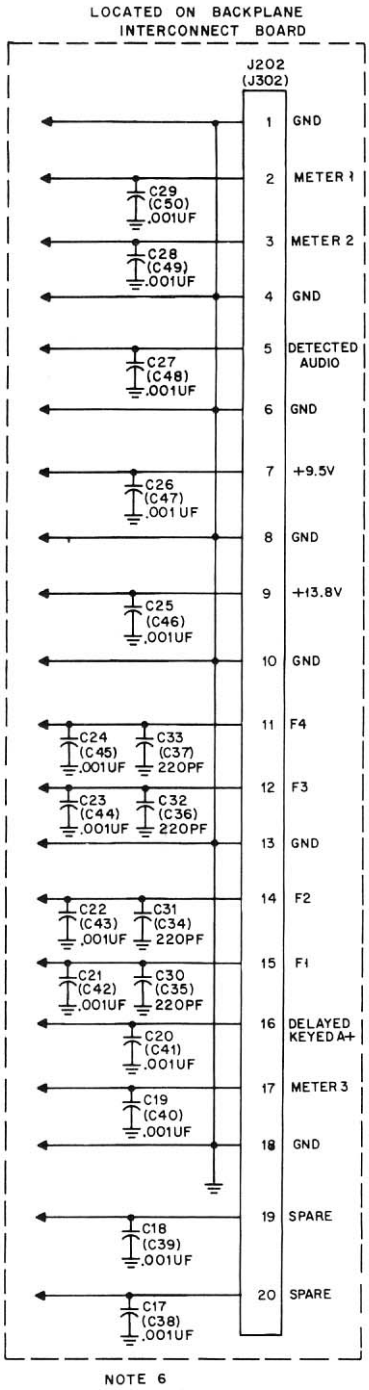
LOCATED ON BACKPLANE INTERCONNECT BOARD
J202 (J302)
1 GND
2 METER 1
C29 (C50) .001UF
3 METER 2
C28 (C49) .001UF
4 GND
5 DETECTED AUDIO
C27 (C48) .001UF
6 GND
7 +9.5V
C26 (C47) .001 UF
8 GND
9 +13.8V
C25 (C46) .001UF
10 GND
11 F4
C24 (C45) .001UF
C33 (C37) 220PF
12 F3
C23 (C44) .001UF
C32 (C36) 220PF
13 GND
14 F2
C22 (C43) .001UF
C31 (C34) 220PF
15 F1
C21 (C42) .001UF
C30 (C35) 220PF
16 DELAYED KEYED A+
C20 (C41) .001UF
17 METER 3
C19 (C40) .001UF
18 GND
19 SPARE
C18 (C39) .001UF
20 SPARE
C17 (C38) .001UF
NOTE 6

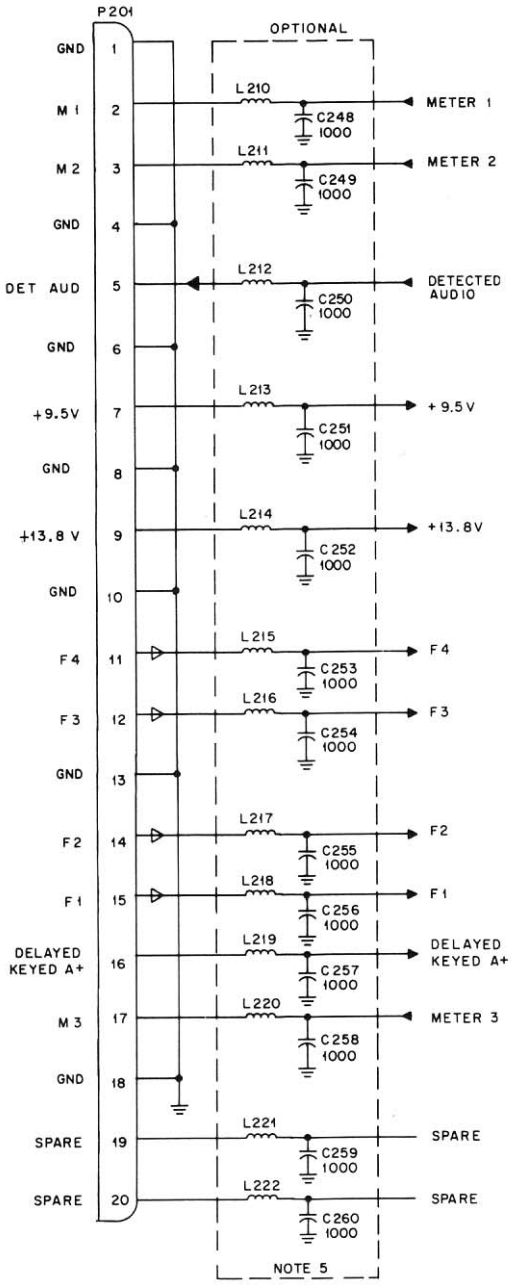
P201
OPTIONAL
GND 1
M 1 2
L210
C248 1000
METER 1
M 2 3
L211
C249 1000
METER 2
GND 4
DET AUD 5
L212
C250 1000
DETECTED AUDIO
GND 6
+9.5V 7
L213
C251 1000
+ 9.5 V
GND 8
+13.8 V 9
L214
C252 1000
+13.8V
GND 10
F 4 11
L215
C253 1000
F 4
F 3 12
L216
C254 1000
F 3
GND 13
F 2 14
L217
C255 1000
F 2
F 1 15
L218
C256 1000
F 1
DELAYED KEYED A+ 16
L219
C257 1000
DELAYED KEYED A+
M 3 17
L220
C258 1000
METER 3
GND 18
SPARE 19
L221
C259 1000
SPARE
SPARE 20
L222
C260 1000
SPARE
NOTE 5

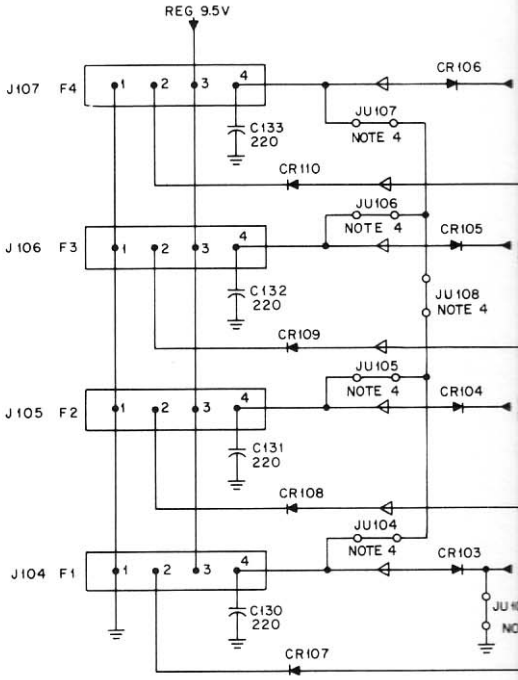
REG 9.5V
J107 F4
CR106
C133 220
JU107 NOTE 4
CR110
JU106 NOTE 4
J106 F3
CR105
C132 220
JU108 NOTE 4
CR109
JU105 NOTE 4
J105 F2
CR104
C131 220
CR108
JU104 NOTE 4
J104 F1
CR103
C130 220
CR107

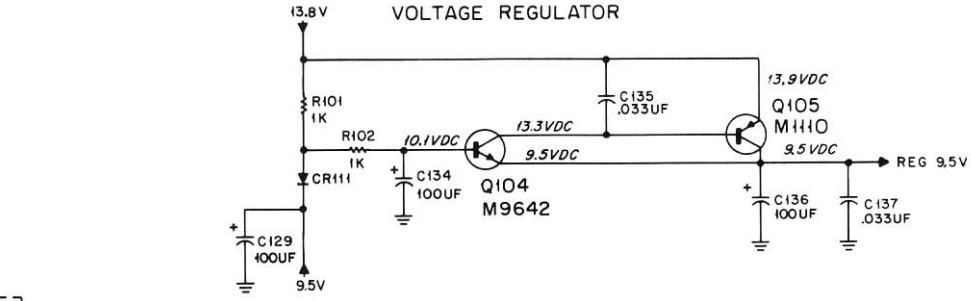
VOLTAGE REGULATOR
13.8V
R101 1K
R102 1K
CR111
C129 100UF
9.5V
10.1VDC
C134 100UF
13.3VDC
9.5VDC
Q104 M9642
C135 .033UF
13.9VDC
Q105 M1110
9.5VDC
REG 9.5V
C136 100UF
C137 .033UF

NOTE 6

UHF RECEIVER

MODEL TRE6160A, 70A SERIES

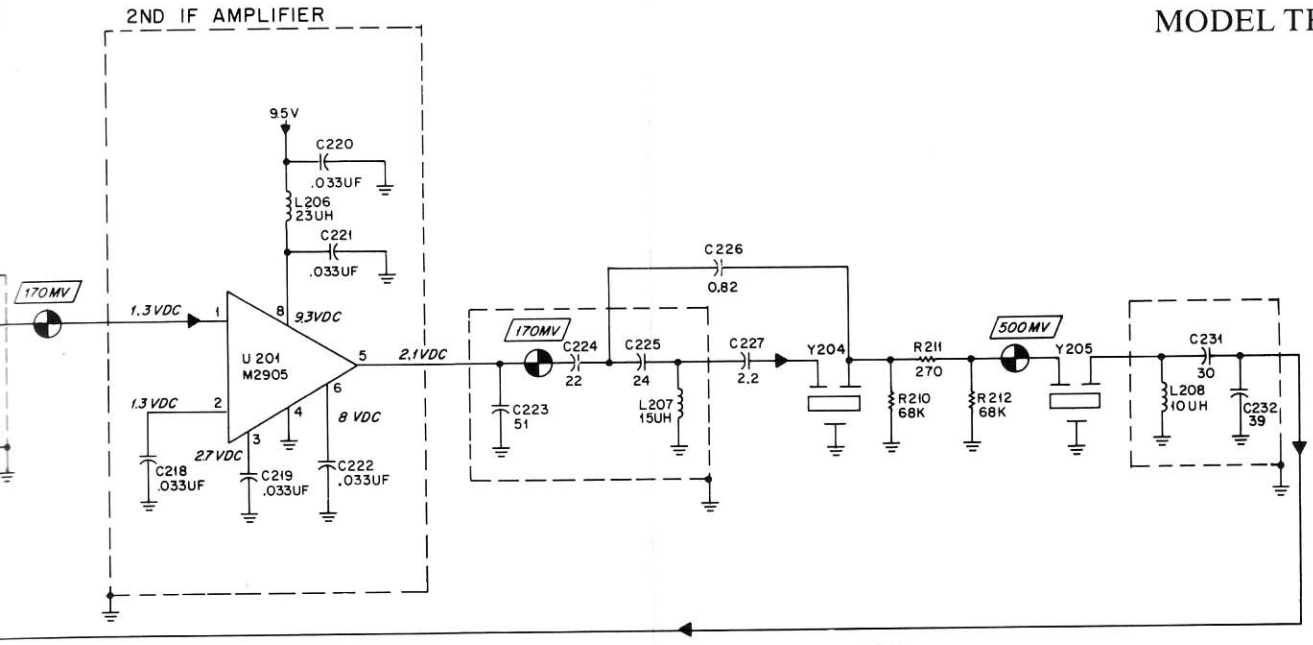

NOTES:

1. Unless otherwise indicated resistor values are in ohms; capacitor values are in picofarads.
2. Integrated circuits on this board are linear devices.
3. IC types and connections for this board are as follows:

Reference Designation	VCC	Gnd
U201	8	4
U202	11	4, 14

4. Jumper Installation

	Function
JU101	Out For Simplex Operation; In For RPTR Operation
JU103	In on Single Frequency Radios (To Enable F1 Channel Element)
JU104 JU105 JU106 JU107 JU108	As required to bus 2 or more channel select lines to a single channel element when these channels use the same receiver frequency.

5. TRE6162A, TRE6163A, TRE6172A, and TRE6173A use C248 thru C260 and L210 thru L222 as shown. For TRE6152A, TRE6153A, C248 thru C260 are deleted and L210 thru L222 are replaced with jumper wires.
6. Connector J202 and bypass capacitors C17-C29 and C30-C33 used for R1 receiver position on interconnect board. Component designators shown in ( ) used for R2 receiver position on interconnect board.
7. Connect an on-channel signal generator modulated with a 1.0 kHz tone 3 kHz deviation, at a 1.0 mV rf level to the receiver input. Measure the ac voltage from pin 5 of P201 to ground. If the voltage is less than 200 mV rms, then cut out R229. (This procedure is performed at the factory prior to shipment.)
8. Frequency range sensitive parts, values shown are for 450-470 MHz radio. See parts list for 470-512 MHz radios.
9. Refer to parts list for values of R219 and R228 and for part number of U202.

AMPLIFIER

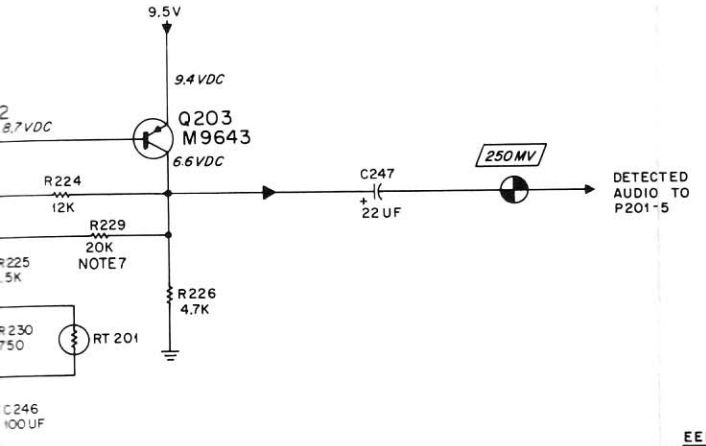

EEPS-36264-A

Kit	Description	Frequency Range
TRE6152A	Receiver 10.7 MHz I-F, Non-Filtered	450-470 MHz
TRE6162A	Receiver 10.7 MHz I-F, Filtered	
TRE6172A	Receiver 10.8 MHz I-F, Filtered	
TRE6153A	Receiver 10.7 MHz I-F, Non-Filtered	470-494 MHz
TRE6163A	Receiver 10.7 MHz I-F, Filtered	
TRE6173A	Receiver 10.8 MHz I-F, Filtered	
TLE5561A	Preamplifier (Optional)	450-512 MHz

Schematic Diagram
Motorola No. PEPS-37321-E
(Sheet 2 of 2)
11/15/85-PHI

MOTOROLA INC.
Communications Sector

UHF TRANSMITTER

1. GENERAL

The transmitter used in the Motorola *MSR 2000* UHF Base or Repeater Station consists of an exciter board mounted in the rf control chassis, and the power amplifier deck mounted at the top of the cabinet. Table 1 provides the UHF transmitter performance specifications. Refer to the attached Transmitter Functional Block Interconnect Diagram for signal flow.

2. EXCITER

2.1 Two versions of the exciter are available. The TLE5502A Simplex Exciter is intended for use with stations operating simplex (non-simultaneous transmit/receive), i.e., base stations. The TLE5512B Duplex Exciter contains additional interconnection filtering, and is intended for used with stations operating duplex (simultaneous transmit/receive), i.e., repeater stations.

2.2 The exciter board is easily accessed for alignment by swinging the rf-control chassis out and down. Refer to the Maintenance section of the accompanying manual for service access procedure.

3. POWER AMPLIFIER

The TLE2280B Series Power Amplifier consists of a power amplifier substrate carrier (with substrates), a harmonic filter substrate, a power control board, and an A+ distribution board, mounted in a rugged aluminum casting. All circuitry is fully shielded, and is easily accessed for alignment and servicing without removing the PA deck from the station. Refer to the Maintenance section of the accompanying manual for service access procedure.

4. ALIGNMENT

The following transmitter alignment procedure involves adjustments on the exciter and on the power control boards. The alignment procedure is for use with the Motorola TEK-5 Series Meter Panel, S1050 Series Portable Test Set, or optional station metering (Model TRN5080A DC Metering Chassis). Perform a complete transmitter alignment as necessary, or whenever changing the transmitter frequency. A complete transmitter alignment must be performed in the following sequence:

- Exciter-PA,
- Oscillator Frequency, and
- Instantaneous Deviation Control (IDC) of transmitter modulation.

Table 1. Performance Specifications

Frequency Separation	9 MHz
Number of Channels	1, 2, 3, or 4
Frequency Stability	±.0002% from -30°C to +60°C (25°C reference)
Power Output	Continuously variable, into 50 ohm load (20% duty cycle per EIA RS152B) 100 to 50 watts: 450 to 470 MHz 85 to 45 watts: 470 to 494 MHz and 80 to 45 watts: 494 to 512 MHz
Maximum Frequency Deviation	±5 kHz @ 1 kHz
Sideband Spectrum	±25 kHz 80 dB below carrier ±1 MHz 95 dB below carrier
Hum and Noise	55 dB below 60% deviation @ 1 kHz
Audio Response	+1, -3 dB from 6 dB/octave, 300-3000 Hz, referenced to 1000 Hz
Spurious: Conducted Radiated Audio Distortion	85 dB below carrier -13 dBm (dipole substitution method) Less than 2% @ 1000 Hz, 60% system deviation

SPECIFICATIONS SUBJECT TO CHANGE WITHOUT NOTICE

technical writing services
1301 E. Algonquin Road, Schaumburg, IL 60196

9/16/85-PHI

68P81064E76-B

UHF TRANSMITTER ALIGNMENT

- The transmitter must be terminated with an UHF-rated wattmeter with a 50-ohm resistive dummy load capable of dissipating at least 125 watts.
- Key the transmitter **only** while making adjustments.
- All coil slugs should be within the limits of the coil form or casting when the transmitter is properly tuned.
- FLO = Lowest transmit channel frequency, and
  FHI = Highest transmit channel frequency.

5. The transmitter alignment procedure should be performed using Model TRN5080A DC Metering Chassis, or Motorola TEK-5 Meter Panel (set to position "D" for exciter or "E" for PA), or Motorola S1056-1059 Portable Test Set (used with TEK-37A Test Set Adapter).

CAUTION

Do not key transmitter for more than a few seconds at a time, until it is properly tuned. Key transmitter for brief periods while reading meter and making adjustments.

EXCITER COIL PRESET CHART

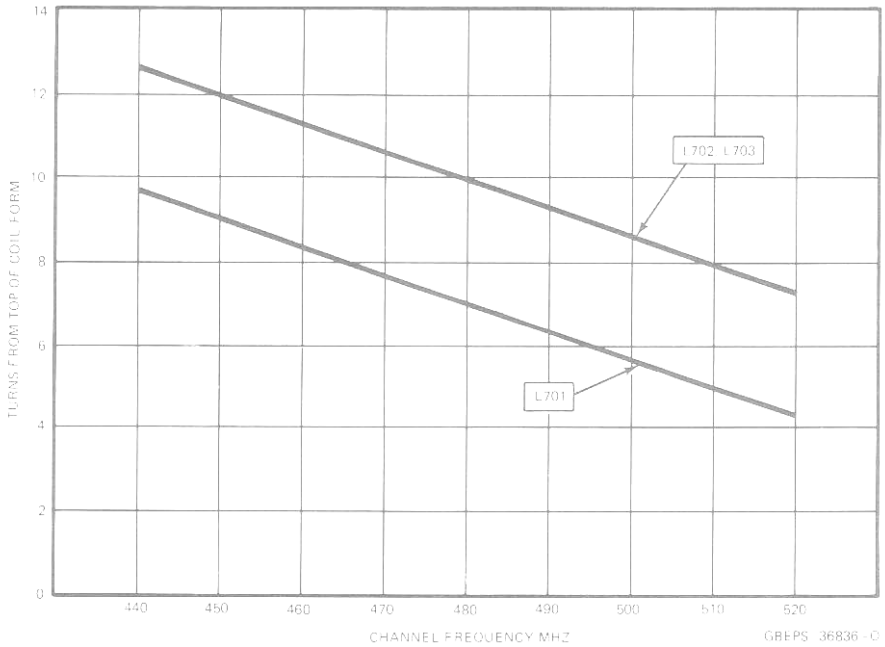

CHANNEL FREQUENCY MHZ
GBEPS 36836-O

OSCILLATOR FREQUENCY ADJUSTMENT

Setting oscillator frequency should be done AFTER exciter-power amplifier alignment, but BEFORE transmitter deviation is set. To set oscillator on frequency, perform the following procedure:

Step 1. Select transmitter operating frequency F1. Connect frequency meter to transmit antenna connector via a dummy load (refer to instructions provided with meter).

Step 2. Key transmitter with no modulation.

NOTE

On stations equipped with *Private-Line* or *Digital Private-Line* signaling, the PL/DPL encoder must be disabled. This is accomplished by grounding pin 14 of the PL/DPL module position on the backplane interconnect board.

Step 3. Adjust F1 FREQ control for proper reading on frequency meter. If the frequency, as indicated on the frequency meter is too low, turn the F1 FREQ control clockwise. If the frequency is too high, turn the F1 FREQ control counterclockwise. Set frequency within ± 100 Hz.

NOTE

Omit Steps 4 and 5 for 1-frequency stations.

Step 4. Select transmitter operating frequency F2, and repeat Step 3 using F2 FREQ control.

Step 5. Repeat Step 4 for F3 and F4 using F3 FREQ and F4 FREQ controls, respectively.

INSTANTANEOUS DEVIATION CONTROL (IDC) OF TRANSMITTER MODULATION ADJUSTMENT

NOTE

The Oscillator Frequency Adjustment must be made prior to this adjustment.

Step 1. Connect the output leads of an audio oscillator, through a 0.33 uF ± 5%, 50 V capacitor (Motorola Part No. 8-11023A31), to exciter pins 12 (EXCITER AUDIO HI) and 11 (EXCITER AUDIO LO).

Step 2. Connect an ac voltmeter across the same terminals, and adjust the audio oscillator output to 350 mV rms at 1000 Hz.

Step 3. Connect a deviation monitor to the transmit antenna connector via a dummy load (refer to instructions provided with monitor).

Step 4. Key transmitter and adjust F1 IDC while observing deviation monitor. Adjust control for 4.7 kHz deviation.

NOTE

If station transmits *Private-Line* or *Digital Private-Line* signals, PL/DPL deviation with audio oscillator disconnected should now be between 0.5 and 1 kHz.

Step 5. Repeat Step 4 for each frequency used, adjusting the IDC control corresponding to each channel.

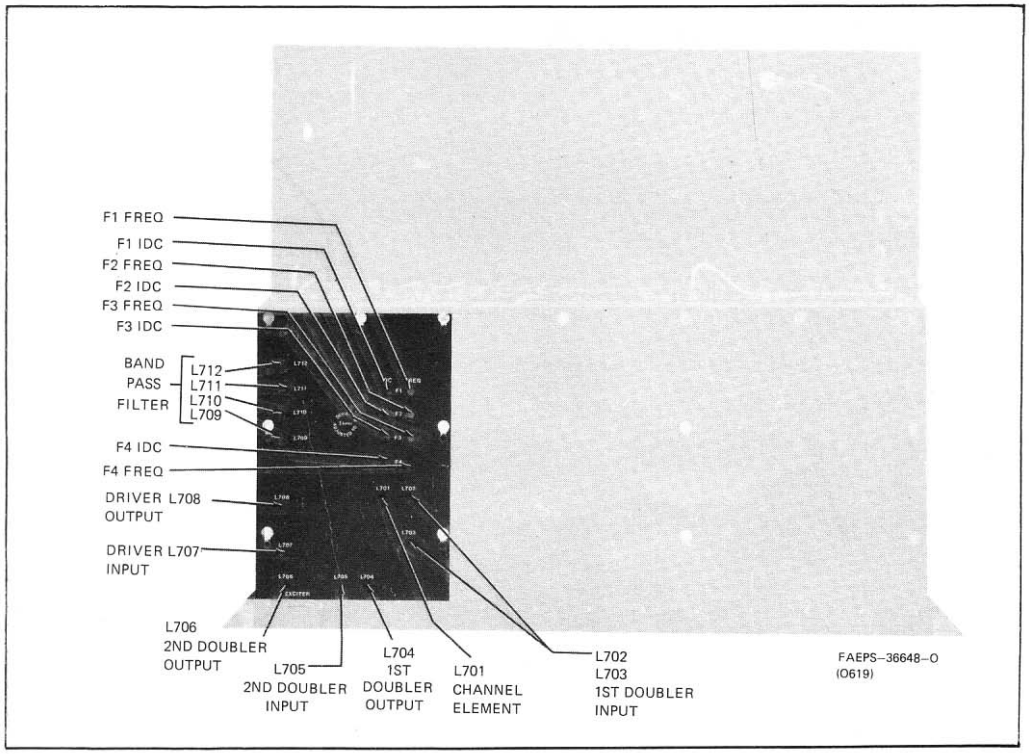

Figure 3. Exciter Adjustment Location Detail

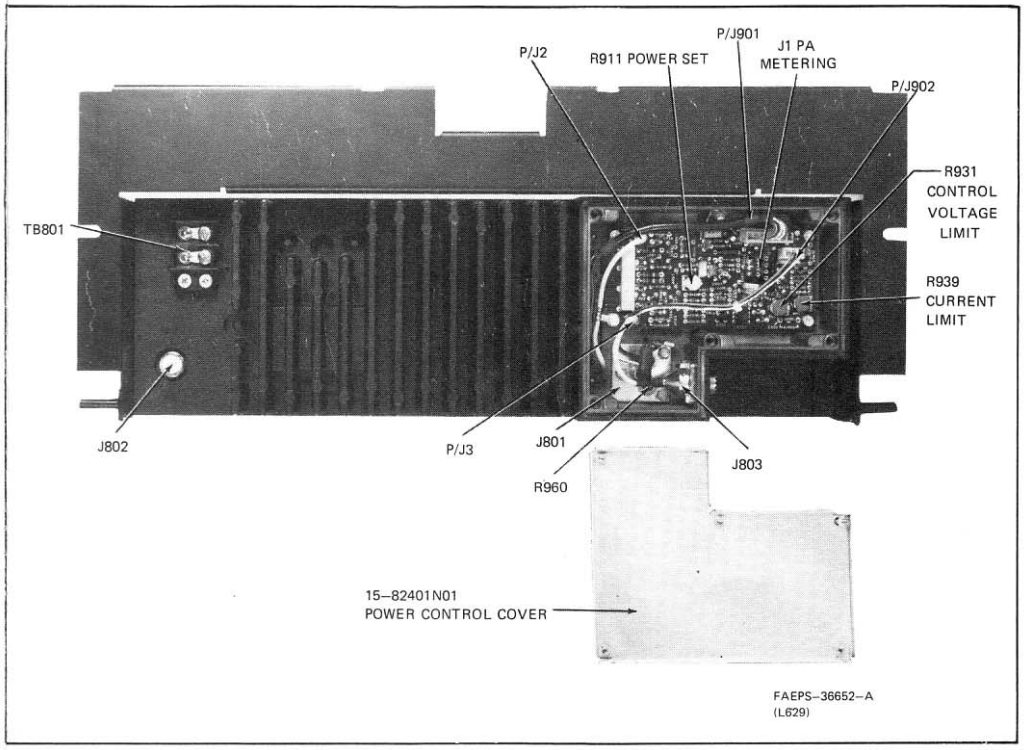

Figure 4. PA Deck (Power Control Board) Adjustment Location Detail

UHF TRANSMITTER

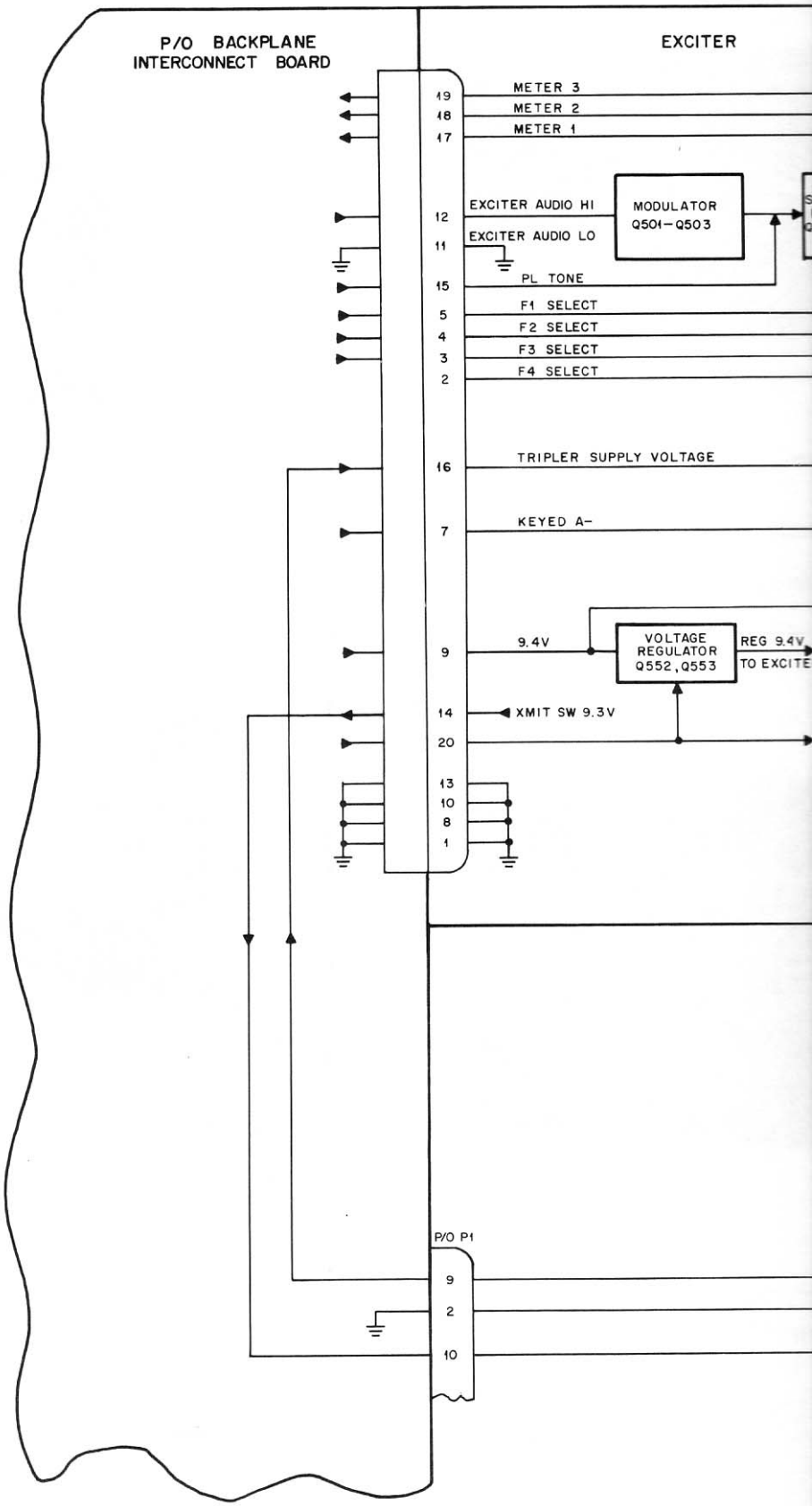

Functional Block Interconnect Diagram
Motorola No. ***PEPS-37343-B***
(Sheet 2 of 2)
9/16/85-PHI

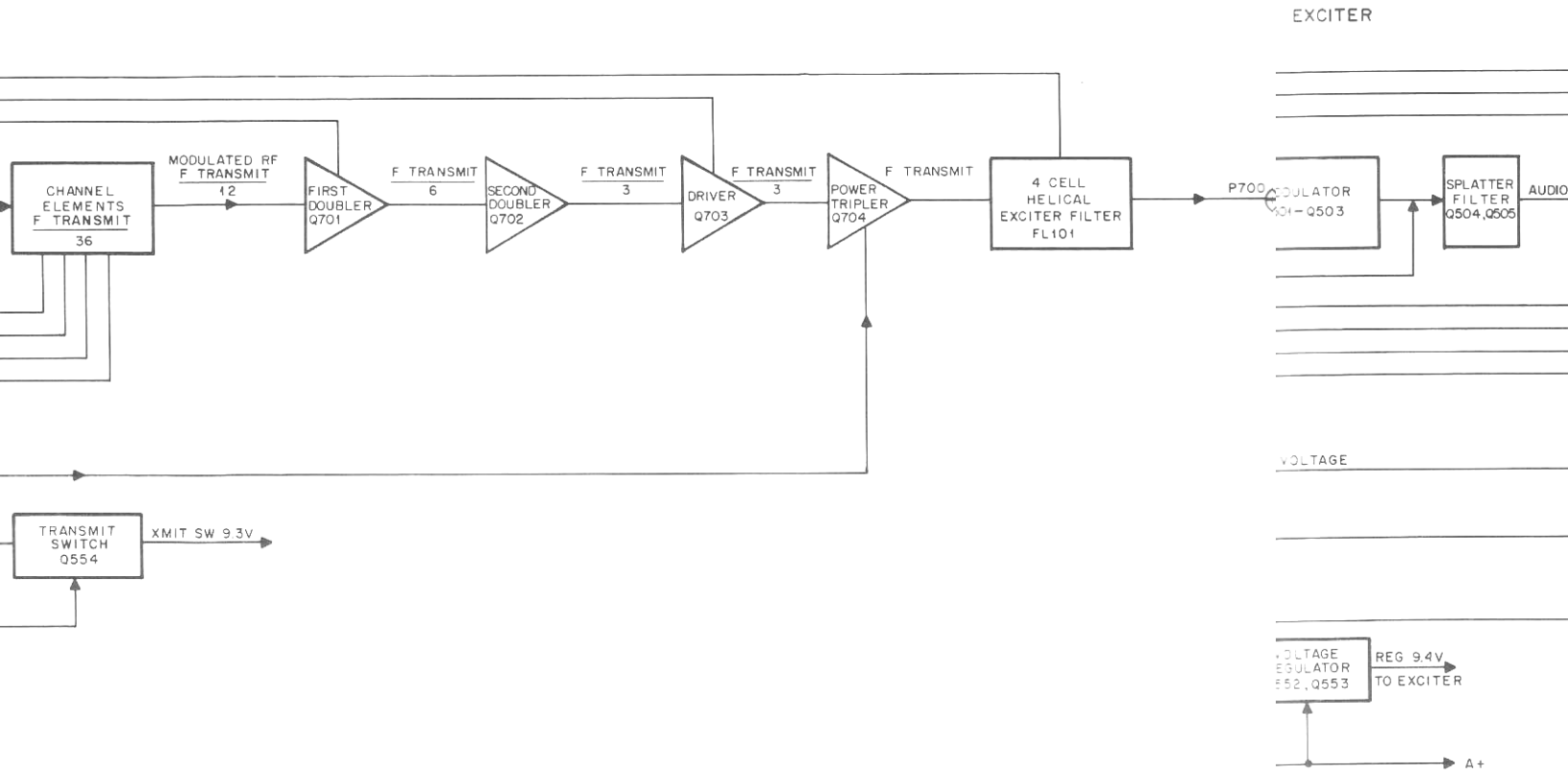
EXCITER
CHANNEL ELEMENTS F TRANSMIT 36
MODULATED RF F TRANSMIT 12
FIRST DOUBLER Q701
F TRANSMIT 6
SECOND DOUBLER Q702
F TRANSMIT 3
DRIVER Q703
F TRANSMIT 3
POWER TRIPLER Q704
F TRANSMIT
4 CELL HELICAL EXCITER FILTER FL101
P700
SPLATTER FILTER Q504,Q505
AUDIO
VOLTAGE
TRANSMIT SWITCH Q554
XMIT SW 9.3V
REG 9.4V
TO EXCITER
A+

2.3.3 Driver Q703 provides amplification of the 1/3 carrier frequency, which drives final amplifier & tripler Q704. Final amplifier & tripler Q704 operates as a frequency tripler, providing low-level carrier frequency power to drive the power amplifier deck. The output of Q704 is coupled to FL101, a 4-cell helical filter. Filter FL101 attenuates any undesired harmonics produced by final amplifier & tripler Q704. The filter output, which is matched to 50 ohms, is routed via a coaxial cable, to the power amplifier deck.

3. EXCITER FUNCTIONAL TESTS

The tests in this section should be performed AFTER servicing but BEFORE alignment, to verify that the exciter circuitry is operating correctly.

3.1 EXCITER POWER OUTPUT TEST

Step 1. Disconnect exciter output cable from the power amplifier deck, and connect it to an UHF-rf wattmeter with a dummy load.

Step 2. Key transmitter and observe wattmeter. Power output is normally at least 400 mW.

3.2 FREQUENCY TEST

Step 1. Terminate the transmitter in an antenna or dummy load and measure the radiated signal frequency with a Motorola digital frequency meter or other highly accurate frequency measuring device (±.00005% or better) when the transmitter is keyed in the following steps.

Step 2. Key the transmitter to produce an unmodulated carrier signal. In stations equipped with PL or DPL coded squelch, disable the encoder by shorting the disable pin to ground (pin 14 on the PL/DPL module position on the backplane interconnect board).

NOTE

Do not use microphone push-to-talk switch to key station. Background noise can modulate the transmitter.

Step 3. Read transmitter output frequency. Repeat for each channel on multi-frequency transmitters.

3.3 DEVIATION TEST

Step 1. Terminate transmitter with an antenna or dummy load and measure the radiated signal deviation using a Motorola deviation monitor when the transmitter is keyed in the following steps.

Step 2. (PL/DPL models only.) Remove PL/DPL inhibit jumper (if installed during previous test). Key transmitter without voice modulation. Normal PL/DPL deviation is 0.5 to 1 kHz.

Step 3. Connect audio oscillator to exciter board pins P501-12 (EXCITER AUDIO HI) and P501-11 (EXCITER AUDIO LO). Set audio oscillator to 1000 Hz at 350 mV rms output. Normal deviations is 4.7 kHz.

Step 4. Adjust audio oscillator over 300-3000 Hz range, keeping audio level at 1 volt. Normally, deviation never exceeds ±5 kHz, nor is less than ±2.5 kHz.

4. TROUBLESHOOTING

Refer to Table 1 for exciter troubleshooting procedure.

Table 1. Exciter Troubleshooting Procedure

Symptom	Cause	Test or Correction
No Meter 1 Reading	1. Unused or out-of-frequency range channel selected.	1. Ground channel element enable (pin 5) for active channel.
	2. No XMIT SW 9.3 V.	2. Check for presence of keyed A-, check or replace Q554.
	3. No REG 9.4 V.	3. Check circuitry of Q552.
	4. Bad channel element.	4. Try different channel or replace element.
	5. L701, L702, L703 mis-tuned.	5. Perform Exciter-PA Alignment Procedure.
No Meter 2 Reading	1. Bad Q701, Q702, and/or Q703.	1. Check and replace as required.
	2. No REG 9.4 V.	2. Check circuitry of Q552.
	3. Mis-tuned L704 thru L708.	3. Perform Exciter-PA Alignment Procedure.
Low or No Output Power	1. Bad Q703 or Q704.	1. Check and replace as required.
	2. Improper tripler supply voltage.	2. Troubleshoot power control board, or PA A+, or R960.
	3. Mis-tuned helical filter FL101 (includes: L709 thru L712).	3. Retune (ALL tuning screws must be preset).
Insufficient Deviation	1. Bad Q501.	1. Check and replace as required.
	2. Wrong jumpers installed.	2. Check that JU501 is out and JU502 is in for non-DVP™ station.

REFERENCE SYMBOL	MOTOROLA PART NO.	DESCRIPTION
L751, 752	24-82835G13	choke; 0.82 uH
L753	24-80036A02	1/2 turns
L754	24-84411B03	11-1/2 turns; coded (BRN)
L755	24-11030C05	1/2 turns
L756	24-84411B04	10-5/8 wire, bare; 0.44"
L757	24-84614A04	1/2 turns
L758	24-83961B01	2 turns (TLE5502 only)
		connector, plug:
P500, 501	28-83254N01	male; 10-contact (TLE5512 only)
	or 9-83497F05	female; 10-contact (TLE5502 only)
P700	9-84135B02	female; phono
P701	9-83445D01	meter probe
		transistor: (see note)
Q501	48-869642	NPN; type M9642
Q502	48-869643	PNP; type M9643
Q503	48-869642	NPN; type M9642
Q504	48-869643	PNP; type M9643
Q505	48-869642	NPN; type M9642
Q552	48-84411L10	PNP; type M1110
Q553	48-869642	NPN; type M9642
Q554	48-869649	PNP; type M9649
Q701	48-869494	NPN; type M9494
Q702	48-869638	NPN; type M9638
Q703	48-869657	NPN; type M9657
Q704	48-869887	NPN; type M9887
		resistor, fixed: ±5%; 1/4 W: unless otherwise stated
R501	6-11009A65	4.7k
R502	6-11009A57	2.2k
R503	6-11009A27	120
R504	6-11009A25	100
R505, 506	6-11009A83	27k
R507, 508	6-11009A13	33
R509, 510	6-11009A93	68k
R511	6-10621B94	1k ±1%
R513	6-11009A85	33k
R514, 515	6-11009A73	10k
R517	6-11009A63	3.9k
R518, 519	6-10621C75	6.8k ±1%
R520	6-11009A32	200
R521	6-11009A83	27k
R522	6-11009A38	360
R523	6-11009A01	10
R550	6-11009A49	1k
R551, 552	6-11009A48	910
R554	6-11009A59	2.7k
R555	6-11009A73	10k
R701	6-11009A65	4.7k
R702	6-11009A92	62k
R703	6-11009A49	1k
R704	6-11009A87	39k
R705	6-11009A05	15
R706	6-11009A73	10k
R707	6-11009A17	47
R708	6-11009A25	100
R709	6-11009A57	2.2k (TLE5502 and TLE5512)
R710	6-11009A25	100
R711	6-11009A57	2.2k
R770	6-11009A83	27k
R771	6-11009A57	2.2k
R772	6-11009A33	220
R773	6-125C29	150 ±10%; 1/2 W
R775	6-11009A17	47
R776	6-11009A77	15k
R778	6-11009A17	47
R779	17-82036G08	10; 2 W
		thermistor:
RT512	6-84259H02	44k ±10% @ 25°C
	mechanical parts	
	2-80045A03	NUT, lock; 4 used
	3-7152	SCREW, machine: 6-32 x 1/4"
	3-80012A03	SCREW, set: M6 x 1 x 25 mm; 4 used
	4-1719	WASHER, flat
	5-82050H02	EYELET, copper: .059 x .093
	14-861196	INSULATOR, xtal; 2 used
	15-84637N01	HOUSING
	15-84639N01	COVER, bottom
	26-80039A01	SHIELD, can (L706, 707, 708); 3 used
	26-80093A01	HEAT SINK (Q704)
	26-80150B01	HEAT SINK (Q703)
	26-80196A01	SHIELD, can (L701 thru 705); 5 used
	45-83224N01	LEVER, ejector; 2 used
	64-82069P01	PLATE, nut

note: For optimum performance, diodes, transistors, and integrated circuits must be ordered by Motorola part numbers.

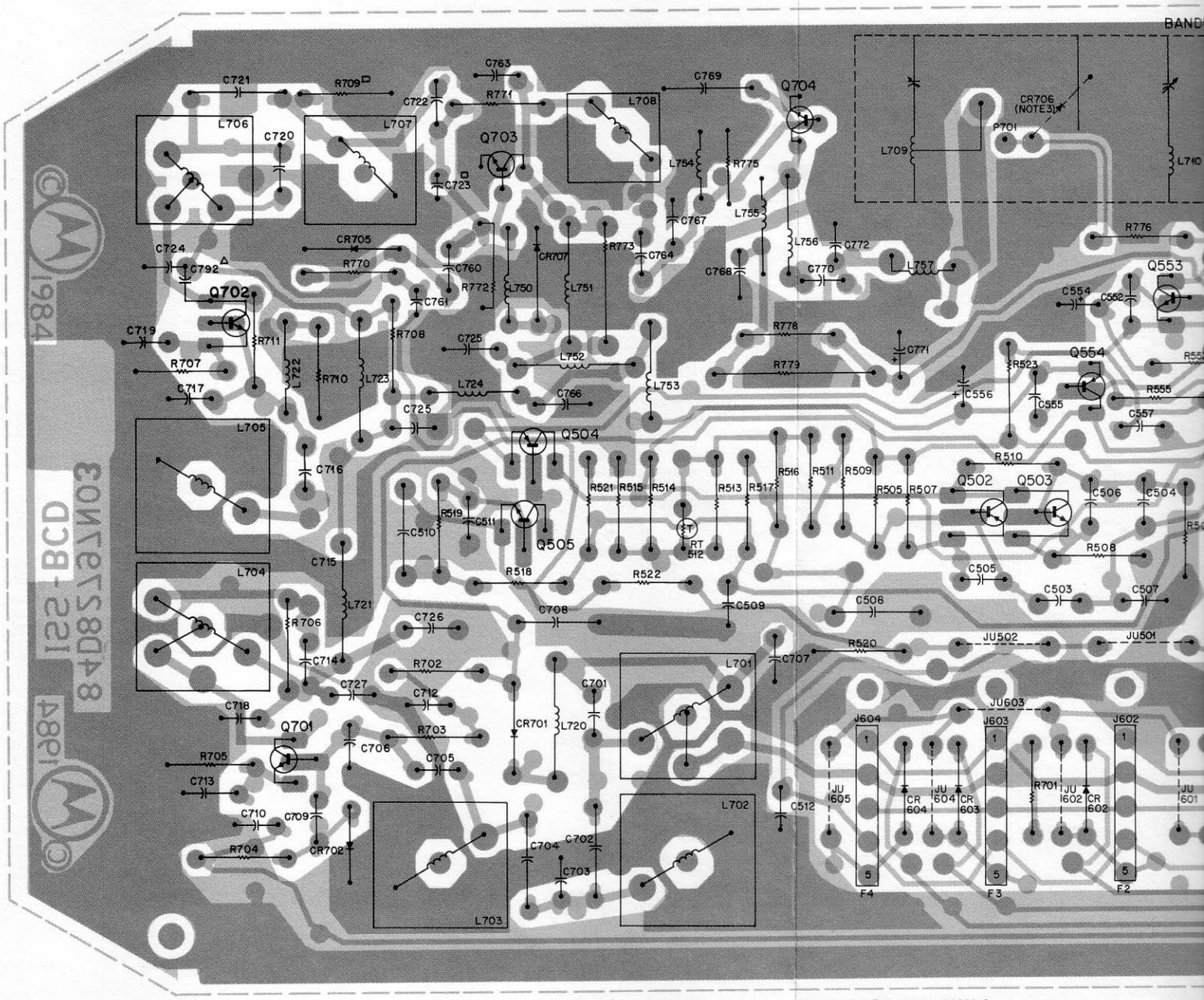

SOLDER SIDE BD-EEPS-36681-A
COMPONENT SIDE BD-EEPS-36680-A
OL-EEPS-36679-B

SHOWN FROM COMP

EXCITER

MODEL TLE5502A (SIMPLEX)
MODEL TLE5512B (DUPLEX)
MODEL TLE5812A
(DUPLEX, SINGLE FREQUENCY)

NOTES:

1. Unless otherwise indicated: resistor values are in ohms and capacitor values are in picofarads.
2. Transmitter frequency calculation: $F_{oscillator} = F_{channel/36}$.
3. TLE5502A Simplex Exciter with female edge connectors P500/P501. TLE5512B Duplex Exciter uses C775-C789 shown, with male edge connectors P500/P501.
4. Simplex exciter is connected to male backplane connector J102. Duplex exciter is connected to female filter module connector J102.
5. Backplane bypass capacitors C1-C16 and duplex filter module are part of backplane interconnect board assembly. Refer to associated Control and Audio Instruction manual for replacement parts information and location.
6. L756 is a 22 gauge jumper wire.

Exciter Model Chart

Kit	Frequency (MHz)	Type
TLE5502A	450-512	Simplex
TLE5512B	450-512	Duplex

7. Component Value Chart

Component	Value (TLE5502A) (TLE5512A)	Value (TLE5812A)
C720	9	3
C721	1.0	.2
C722	9	3.3

8. Components designated with (□) are present on TLE5502A Simplex Models and TLE5512A Duplex Models only.
9. Components designated with a △ are present on TLE5812A Duplex Single Freq-

Motorola No. PEPS-37344-C
(Sheet 2 of 2)
5/20/86-PHI

wer Amplifier Deck
k casting and associ-
power amplifier sub-
oard and the power
mplifier deck model
oss reference of the
owing paragraphs de-
oubleshooting infor-
rcuitry. Because the
by the alignment of
is part of the overall
ovided in the Trans-

ION

UITRY

is applied, via J802,
The 350 mW (nomi-
ied by Q801, on the
oximately 1.5 watts.

put signal is applied
, which together de-
The driver output is
d to three parallel fi-
307. The three paral-
s are combined to
t (minimum) of 100
at 470-494 MHz), or

put signal is routed
te and, via a direc-
board, passed on to
3.

2.2 POWER CONTROL CIRCUITRY

2.2.1 General

2.2.1.1 The power control board provides power amplifier protection and power regulation. Output impedance match, final amplifier current and temperature, control voltage level, and power output are monitored by the power control circuit. In turn, the power control circuit controls the low level amplifier output to provide the appropriate level for proper power amplifier operation.

2.2.1.2 The resistive voltage divider consisting of R926, R927, and R928 provides dc biasing voltages to improve directivity of the directional coupler, and to set the operating point of the directional coupler inputs to the forward power and protection comparators. The reference voltage for forward power detector U901A is developed across power set control R911. The reference voltage for protection comparator U901B is developed at the junction of R913 and R914.

2.2.2 Thermal Protection

As the temperature of the power amplifier board increases, the resistance of RT801 decreases, causing the voltage on the TEMP SENSE HI line to decrease. When this voltage reaches approximately 4.8 volts, CR904 conducts, dropping both the forward power detector and protection comparator reference voltages. This causes the comparators to reduce the voltage on the CONTROL VOLTAGE line, which reduces the low level amplifier drive to the rest of the power amplifier. The net effect of this is to lower power amplifier output and heat, keeping operating temperature within safe operating limits.

2.2.3 Forward Power Level Control

Forward output power, sampled by the directional coupler, is rectified and filtered by the circuitry associated with CR901. The detected voltage is applied to the inverting input of forward power detector U901A, where it is compared to the set level at the noninverting

1. GENERAL

The Model TLE2280B Series Po
consists of the power amplifier dec
ated hardware, which contains the
strates at the A+ distribution b
control board. Refer to the power
chart, shown in Figure 1, for a c
power amplifier deck kits. The follo
tail the theory of operation and t
mation for the power amplifier c
setting of power levels is affected
the exciter, the power set procedure
transmitter alignment procedure p
mitter section of this manual.

2. THEORY OF OPERAT

2.1 POWER AMPLIFIER CIRC

2.1.1 The output from the exciter
to the power amplifier substrates.
nal) exciter output signal is amplif
low level amplifier substrate to app

2.1.2 The low level amplifier out
to predriver Q803 and driver Q804
velop up to 45 watts of rf power.
split into three portions and applie
nal amplifiers, Q805, Q806, and Q8
lel final amplifier output signal
provide a PA deck rf power outpu
watts (at 450-470 MHz), 85 watts (
80 watts (at 494-512 MHz).

2.1.3 The PA deck rf power out
through a harmonic filter substra
tional coupler on the power control
the station antenna connector, J80

MODEL CHART

FOR

TLE2280A SERIES

UHF POWER AMPLIFIER DECK

VARIABLE RF POWER OUTPUT

450-470 MHz: 100 TO 50 WATTS

470-494 MHz: 85 TO 45 WATTS

494-512 MHz: 80 TO 45 WATTS

(EARLY VERSION)

CODE:

- ● = ONE ITEM SUPPLIED
- * = NOT PART OF MODEL SERIES, LISTED FOR REFERENCE ONLY

ITEM	DESCRIPTION
TLE2283A	100 TO 45 WATT PA DECK (450-494 MHz)
TLE2284A	80 TO 45 WATT PA DECK (494-512 MHz)

					ITEM	DESCRIPTION
	●	●			HFE4014A	HARMONIC FILTER
	●	●			HLE4060A	LOW LEVEL AMPLIFIER
	●				HLE4065A	COMBINER (450-494 MHz)
		●			HLE4066A	COMBINER (494-512 MHz)
	●	●			HLE4070A	SPLITTER
	●	●			HLE4074A	DRIVER INPUT SUBSTRATE
	●	●			HLE4079A	PRE-DRIVER SUBSTRATE
	●				HLE4083A	POWER TRANSISTOR KIT (450-494 MHz)
		●			HLE4084A	POWER TRANSISTOR KIT (494-512 MHz)
	●	●			TKN8871A	INTERNAL PA CABLE
	●				TLE5623A	PA MISCELLANEOUS PARTS (450-494 MHz)
		●			TLE5624A	PA MISCELLANEOUS PART (494-512 MHz)
	●	●			*TRN5428A	POWER CONTROL BOARD COVER
	●	●			TRN5696A	POWER CONTROL BOARD
	●	●			TRN5706A	DISTRIBUTION BOARD
	●	●			TRN5708A	PA HARDWARE

EPS-36951-A

Figure 2. Power Amplifier Deck Model Complement

input. If the two levels are not the same, the output level of U901A changes in a direction that raises or lowers the voltage on the CONTROL VOLTAGE line, until the inputs to U901A are matched. This provides a constant rf power output from the PA.

2.2.4 Reverse Power Protection

Reverse (reflected) power sampled by the directional coupler is rectified and filtered by the circuitry associated with CR902. The output voltage across R908 is applied to the inverting input of U901B, and compared to the reference voltage. Under normal operating conditions with the transmitter feeding a 50-ohm load, the reference voltage is higher than the directional coupler voltage. This keeps the output of U901B at maximum, keeping Q905 turned off. If the reflected power increases to the point that the voltage across R908 exceeds the reference voltage, the output of U901B drops, turning on Q905. Increased collector voltage on Q905 causes an increase in the voltage applied to the inverting input of U901A, to force the control voltage and the power output to drop until the inputs to U901A equalize.

2.2.5 Over-Current Protection

Final amplifier current in the power amplifier is sensed through R801. The voltage drop across R801 is applied to the base at Q907. As the voltage at Q907 decreases, Q907 turns on, increasing the voltage across R908. The power cutback occurs in the same manner as described in the Reverse Power Protection paragraph.

2.2.6 Control Voltage Limit

The circuit of Q905 compares the voltage on the CONTROL VOLTAGE line to the voltage set by the position of the wiper on R931. When the control voltage exceeds the set limit, Q905 conducts, raising the voltage at the inverting input of U901A. U901A, in turn, reduces the control voltage until both inputs are balanced.

3. POWER AMPLIFIER SERVICING

CAUTION

If replacing either the Power Control board or the A+ Distribution Board, make sure that they both have the same suffix letter in the model number. For example, if you replace a TRN5696A with a TRN5696B, you must also replace the TRN5706A with a TRN5706B and vice versa. Otherwise, serious overheating of the power amplifier may occur.

IMPORTANT

If replacing the Low Level Amplifier, replace it with the SAME kit number as removed from the PA deck. Earlier model PA decks have an HLE4060A Low Level Amplifier. When required, replace it with another HLE4060A. Additionally, transfer parts C865, C869, R860, and R861 from the original LLA to the new LLA. (Refer to Table 1 for the parts description). Later model PA decks have a TLE5791A Low Level Amplifier. If required, replace it with another TLE5791A. No additional parts changes are necessary. Later and earlier model Low Level Amplifiers are not interchangeable.

Table 1. HLE4060A "Transferred" Parts

Ref. Desg.	Part Numbers	Description
C865	21-11022G25	8 pF ±5%; 50 V
C869	23-82783B24	15 uF ±10%; 25 V
R860	6-125A39	390 ±5%; 1/2 W
R861	6-11009A05	15 ±5%; 1/4 W

3.1 GENERAL

Troubleshooting information for the *MSR 2000* station power amplifier is presented in several levels. It is best to begin by following the power amplifier troubleshooting procedure given in Table 2. If the specific cause of the transmitter failure is not covered in Table 2, the service person is directed to Table 3 (for power control board problems) or to paragraph 3.2 (for power amplifier problems).

3.2 POWER AMPLIFIER SUBSTRATE TROUBLESHOOTING PROCEDURE

3.2.1 Visual Checks

Inspect all transmitter microstrips for obvious physical defects such as broken leads, broken or disconnected components, cracked microstrips, or leached chip capacitors. Microstrip cracks are usually hard to see but can often be found by sliding the tip of a modeling knife or some other sharp object along the surface of the ceramic substrate. Usually, a noticeable "bump" will be felt as the sharp object passes over the crack in the microstrip. Slide the knife in both directions. An ohmmeter can also be used to locate cracks.

Checks and tests in the following paragraphs and Table 2 may be used to locate defects isolated to the power amplifier substrates. The following checks assume 13.8 volts dc is applied to the PA and that the amplifier is driven with a 250-400 mW rf source. Set all power control potentiometers (R911, R931, R939) fully clockwise.

WARNING
Key station intermittently until problem is repaired.

3.2.2 DC Voltage Checks

Step 1. Check the voltage between the C870 A+ feed-thru capacitor (red lead) and the C871 A- feed-thru capacitor (black lead). If the voltage is not the same as the power supply voltage, check the cabling.

Step 2. Measure the dc voltage at the collectors of the final amplifier (Q805-Q807) with respect to A- on the power amplifier. The readings should be greater than +12 volts with the transmitter keyed or unkeyed. If not, check R801 (located on the power distribution board), the A+ collector feed coils, the feed pins, and the combiner substrate for continuity.

Step 33. Similarly, check the dc voltages at the collectors of Q803 and Q804. The readings should be greater than +12 volts. If not, check the A+ collector feed coils, the feed pins, the substrates, and the power distribution board for continuity.

Step 4. The low level amplifier operates from a controlled voltage supplied by the power control circuitry. This voltage normally varies between approximately +3 volts and +10 volts. Key the transmitter and check the control voltage at the collectors of Q801 and Q802. If the readings are less than +10 volts, check the collector feed coils, the feed pins, the low level amplifier substrate, and the power distribution board for continuity or shorts. If these checks fail to isolate the problem, proceed to Table 3.

3.2.3 Low Power Output

Step 1. Remove the exciter output cable at J802. Connect the exciter to a UHF-rated wattmeter with a 50ohm (resistive) dummy load. Key the transmitter. If the power is less than 300 milliwatts, refer to the exciter troubleshooting procedure. If it is greater than 300 milliwatts, replace the exciter cable and continue.

Step 2. Remove the strap connecting the driver output stripline to the splitter substrate. Solder the center conductor of an 8-inch (or shorter) 50-ohm coaxial test cable to the driver output stripline and the shield of the coaxial cable to the adjacent ground pad. With the coaxial cable terminated with a 50 watt, 50-ohm (resistive)

Table 2. Power Amplifier Troubleshooting Procedure

Step	Symptom	Procedure	Normal Indication	If Normal	If Abnormal
1	Suspected Transmitter Failure	Measure rf output power at antenna connector.	Rated power	Transmitter OK.	High Power — perform Power Amplifier Control and Protection Troubleshooting Procedure. Low Power — go to 3. No Power — go to 2.
2	No Output Power	a. Set all controls fully clockwise and observe meters 1 and 5.	Both greater than 15 uA	Go to 2b.	No Indication — Perform Transmitter Control and Protection Troubleshooting Procedure. Meter 1 indication, no Meter 5 indication — go to 2e.
		b. Measure dc voltage across antenna relay coil during transmit.	≥ 5 V ≤ 13 V	Go to 2c.	Check coil continuity (dc resistance approximately 160 ohms).
		c. Check reed switch continuity.	Continuous during transmit	Go to 2d.	Replace Relay.
		d. Check harmonic filter and output cable for shorts and discontinuities.	See schematic diagram	Perform Power Amplifier Substrate Troubleshooting Procedure.	Repair Defect.
		e. Measure rf power at the exciter output.	300 mW minimum	Perform Power Amplifier Substrate Troubleshooting Procedure.	Refer to Exciter section of manual.
3	Low Output Power	a. Set all controls fully clockwise and observe Meter 1.	Greater than 20 uA	Go to 3b.	Perform Power Amplifier Control and Protection Troubleshooting Procedure.
		b. Measure rf power at exciter output.	300 mW minimum	Perform Power Amplifier Substrate Troubleshooting Procedure.	Refer to Exciter section of manual.

Table 3. Power Amplifier Control and Protection Troubleshooting Procedure

Step	Symptom	Procedure	Normal Indication	If Normal	If Abnormal
1	No meter 1 or 5 with all controls clockwise	a. Disconnect PA from exciter J802. Check for keyed 9.3 V at U901-8.	9.3 V	Go to 1b.	Check Q554 (in exciter) keyed 9.3 V switch.
		b. Measure output voltage of U901A, pin 1.	Greater than 3.3 V	Repair fault in control voltage amplifiers Q903 & Q904.	Go to 1c.
		c. Measure voltages to input of U901A, pins 2 & 3.	Pin 3 greater than Pin 2	U901 defective.	Check for shorts or opens in resistive feed circuits to pins 2 & 3.
2	Meter 1 reads max of about 10 uA with all controls fully clockwise. Little or no output power	a. Disconnect PA from exciter at J802. Measure voltage of protection comparator output, at U901B-7.	Greater than 7 V	Troubleshoot Q905 circuit.	Go to 2b.
		b. Measure voltages to input of U901B, pins 5 & 6.	Pin 5 greater than Pin 6	U901 defective.	Analyze and repair current limiter circuitry Q906, Q907 & Q908.
3	All controls inoperative and meter 1 approx. 25 uA	a. Disconnect PA from exciter at J802. Observe meter 1 in RX mode.	0 uA	Go to b.	Repair fault in control voltage amplifiers Q903 & Q904.
		b. Set all controls counter clockwise. Measure pins 2 & 3, U901A in TX mode.	Pin 2 greater than Pin 3	U901 defective.	Look for defect in voltage reference network R926, U927, R928, R912, R911.
4	Control voltage limit (R931), current limit (R939) and reflected power (VSWR) protection inoperative	Q905 and associated resistors probably defective. Analyze and repair.	—	—	—
5	Current limit (R939) inoperative	Disconnect PA from exciter at J802. Pull current sense line (green) from C897. Observe meter 1.	15 uA	Check for short to A+ of current sense line.	Analyze fault in current limit circuit Q906, Q907 & Q908 and repair.
6	Reflected power (VSWR) protection inoperative	Check and repair defect in reflected power detector components R902, CR902, etc.	—	—	—
7	Thermal protection inoperative	Check and repair defect in thermal protection components RT801, R915, R930 and CR904.	—	—	—
8	Power set (R911) inoperative	Check and repair defect in forward power detector components R901, CR901, etc.	—	—	—

dummy load and a UHF-rated wattmeter, key the transmitter. If the driver output is less than 40 watts, the low level amplifier control stage must be checked (Step 3). Remove the coaxial cable and replace the strap.

Step 3. Remove the strap connecting the output stripline (at the output of C808) of the low level amplifier to the input of the pre-driver stage. Remove the coaxial cable from the driver output and solder it in similar fashion to the low level amplifier output. With the transmitter keyed, the power measured at the output of C808 should be at least 2 watts. If not, replace the low level amplifier as instructed in paragraph 3.3.1. Replace the removed straps and realign the transmitter.

Step 4. If the measured power is greater than 2 watts, note the current drawn by the radio set when keyed. Replace the strap between low level amplifier and pre-driver stages and return the coaxial cable to the driver output. With the transmitter keyed, if the increase in the current drawn (over that previously noted) is less than 1.5 amperes, replace the pre-driver (Q803) module. If greater than 1.5 amperes, replace the driver (Q804) module. The power output should now be greater than 40 watts.

Step 5. If amplifier output is still low, the fault can now be attributed to either the final amplifier, or harmonic filter, or directional coupler (on power control board), or associated cables. Carefully unsolder the coaxial cable from the combiner substrate. In its place, carefully solder an 8 inch (or shorter) 50-ohm coaxial test cable connected to a UHF-rated wattmeter with a 200 watt, 50-ohm (resistive) dummy load.

Step 6. Key the transmitter. If the power output is greater then 130 watts (450-470 MHz range) or 100 watts (470-512 MHz range), the harmonic filter, or directional coupler (on power control board), or associated cables are defective. Replace the faulty component and recheck the power output.

Step 7. If the power output of the final amplifier is low, one (or more) of the final amplifier modules is defective. Alternately unsolder the base tab of each final amplifier (Q805-Q807) module from the splitter substrate. Note the power output each time. Replace the module that degrades the output power the least when the base tab is lifted. Repeat this process if the power output (as specified in Step 6) is not obtained.

3.3 TRANSISTOR MODULE REPLACEMENT

NOTE

Transistors are replaced as part of a module assembly. There are six module assemblies in each power amplifier; low level amplifier (controlled stage), pre-driver, driver, and three finals.

3.3.1 To remove the low level amplifier (control stage), unsolder the input coax, output strap, and the bias pin. Carefully pull up on the module until Q801 is released from its heat sink clip. Before installing a new module, apply a light coating of heat sink thermal compound to Q801. Care must be exercised in installing the new module to avoid breaking the substrate. When Q801 is aligned with the heat sink clip, apply pressure to Q801 only until the module is firmly seated.

3.3.2 To remove any of the other modules, unsolder the tabs from the ceramic substrates (8 tabs on driver module and 6 on the pre-driver module and on each of the final stage modules). Remove transistor mounting screws and extract module. Before installing the new module apply a thin coating of heat sink thermal compound to the mounting surface. Be sure that the module output (as indicated by the beveled corner) is facing the proper direction.

CAUTION

The transistor mounting screws must be tightened before the transistor tabs are soldered to the circuit board. *Do not tighten more than 6-7 inch pounds,* or damage to the transistor may result.

Solder the module tabs to the substrate so that the connection covers the entire surface of the tab.

3.4 RF POWER AMPLIFIER ASSEMBLY AND A+ DISTRIBUTION BOARD REMOVAL

3.4.1 Unless access to the A+ distribution board is required, there should be no need to remove the power amplifier assembly. If access is required, the following procedure should be followed.

Step 1. Unsolder bias pin connections from substrates (total of 7).

Step 2. (OPTIONAL) Unsolder input and output coaxial cables.

Step 3. Remove 10 transistor mounting screws.

Step 4. Remove 5 hex head screws holding the plastic carrier.

Step 5. Remove amplifier.

If it is necessary to remove the A+ distribution board, unsolder the 7 feed-thru capacitor connections and remove the 3 mounting screws.

3.4.2 To replace the assembly, reverse the removal procedure. Apply a thin coating of heat sink thermal compound to the transistor mounting surfaces. Start transistor mounting screws to insure proper alignment then insert and tighten the hex head screws in the plastic carrier. Tighten the transistor mounting screws (6-7 inch pounds).

3.5 POWER AMPLIFIER FUNCTIONAL TESTS

3.5.1 General

The tests in this section should be performed AFTER servicing but BEFORE alignment, to verify that the power amplifier and control circuitry are operating correctly.

3.5.2 Set-up

Step 1. Connect radio to proper dummy load through a wattmeter.

Step 2. Plug metering connector of DC Metering Chassis, TEK 5 Metering Panel (set to position E) or S1056-59 Portable Test Set, into J1 on power control board.

CAUTION

Key transmitter only while making test or adjustment.

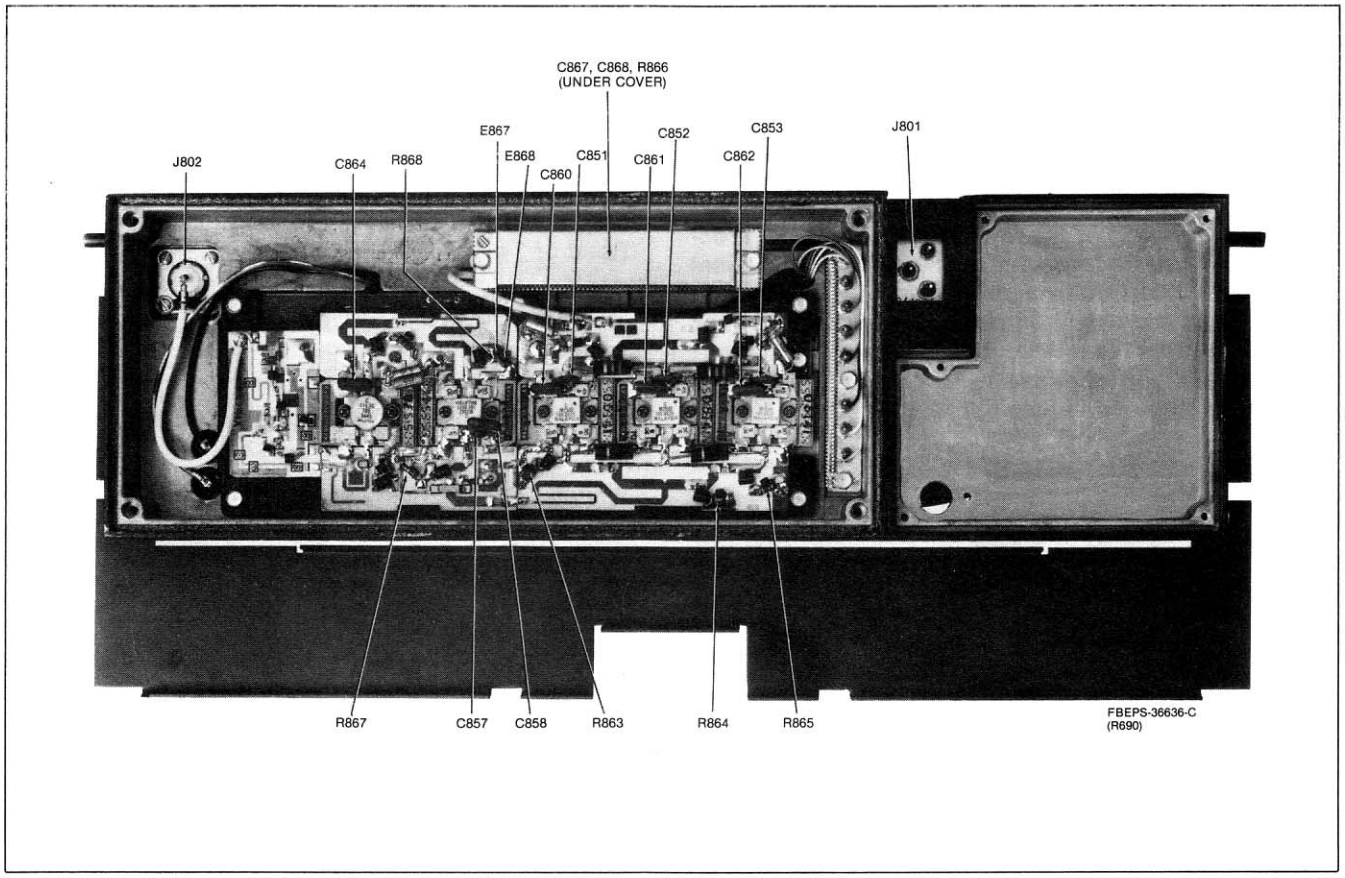

Figure 3. PA Miscellaneous Parts Location Detail

3.5.3 Control and Protection Tests

3.5.3.1 CONTROL VOLTAGE LIMITING

Step 1. Set Current Limit (R939) fully clockwise and Power Set (R911) to mid-rotation.

Step 2. Set Control Voltage Limit (R931) fully counterclockwise. Key transmitter and observe meter 1. Meter 1 should read approximately 10 uA.

Step 3. Set Power Set (R911) fully clockwise. Rotate Control Voltage Limit Set (R931) clockwise. Near mid-rotation the reading of M1 should begin increasing to a maximum of approximately 25 uA at maximum clockwise rotation.

3.5.3.2 CURRENT LIMITING

Step 1. Set Power Set (R911) to mid-rotation and Control Voltage Limit (R931) fully clockwise.

Step 2. Set Current Limit (R939) fully counterclockwise. Key transmitter and observe M5. Meter 5 should indicate less than 14 uA. Set Power Set (R911) fully clockwise. Rotate Current Limit clockwise. Meter 5 should increase to a maximum indication of approximately 28 uA.

Step 3. Remove metering plug from J1 on power control board.

3.5.3.3 POWER SET

Step 1. Set Control Voltage Limit (R931) and Current Limit (R939) fully clockwise.

Step 2. Set Power Set (R911) fully counterclockwise.

Step 3. Key transmitter and observe wattmeter. Power output should be zero. Power output should increase as Power Set is rotated clockwise.

3.5.3.4 THERMAL PROTECTION

Step 1. Set Control Voltage Limit (R931) and Current Limit (R934) fully clockwise.

Step 2. Adjust Power Set (R911) for 110 watt output (450-470 MHz), or 90 watt output (494-512 MHz). Using a short length, (6 inches) of 22 AWG solid wire, short Temp Sense Hi, P901-3, to Temp Sense Lo, P901-1, with P901 connected to J901 on the power control board. Power output should drop to 0 watts.

3.5.3.5 REFLECTED POWER PROTECTION

Step 1. Set Control Voltage Limit (R931) and Current Limit (R939) fully clockwise.

Step 2. Adjust Power Set (R911) for 110 watt output (450-470 MHz), 95 watt output (470-494 MHz), or 90 watt output (494-512 MHz). Remove cable from the station antenna connector, J803.

CAUTION

As the following step requires transmitting without a dummy load, key transmitter long enough to verify operation only.

Step 3. Key transmitter and observe meter 5. Meter 5 should indicate less than 23 uA.

3.5.4 Power Amplifier Deck Test

Step 1. Disconnect PA from station antenna connector, J803.

Step 2. Connect the PA directly to a wattmeter and dummy load via J803.

Step 3. Set Power Set (R911), Control Voltage Limit (R931), and Current Limit (R939) fully clockwise.

Step 4. Key transmitter and observe the wattmeter. Power output should exceed 125 watts if frequency of operation is less than 470 MHz. Power output should exceed 105 watts if frequency of operation is greater than 470 MHz.

parts list

TRN5696B Power Control Board — PL-9856-B

REFERENCE SYMBOL	MOTOROLA PART NO.	DESCRIPTION
		capacitor, fixed: pF ±10%; 50 V: unless otherwise stated
C903 thru 907	21-11022G39	24 ±5%
C908	21-82450B11	3
C911	21-11022G39	24 ±5%
C912	8-11017B10	.018 uF
C913	21-11022G09	24 ±5%
C914	8-11017B08	.01 uF
C917	21-11022G39	24 ±5%
C920	21-11021F04	.01 uF
C921	8-11017B11	.022 uF
C923	23-11019A09	1 uF ±20%
C924	21-11021E21	4700
C925	21-11015B13	.001 uF ±10%; 100 V
C930	21-11015B13	.001 uF ±10%; 100 V
C931	21-11022G39	24 ±5%
		diode: (see note)
CR901, 902	48-84616A01	hot carrier
CR903, 904	48-11034A01	silicon
		directional coupler:
E901	—	Assembly, includes:
	14-82071P01	INSULATOR, coupler; 2 used
	26-80279B01	SHIELD, coupler
	30-80280B01	THROUGH LOOP, coupler
	30-84959N01	PICK-UP LOOP, coupler;2 used
		connector, receptacle:
J1	9-84207B01	female; 7-contact (metering)
J2	9-84231B03	female; phono
J3	29-80014A01	clip, coax
		connector, plug:
J901	28-83441F08	male; 7-contact (WHT)
J902	28-83441F18	male; 3-contact (WHT)
		jumper:
JU902-906	6-11009B23	0 Ohms
		coil, rf:
L901, 902	24-84393B04	wire, bare; 0.19" used
L903, 904	24-82723H04	choke; 0.29 uH
L910	76-83969B01	ferrite bead; 3 used
		transistor: (see note)
Q903	48-869642	NPN; type M9642
Q905	48-869643	PNP; type M9643
Q906	48-869642	NPN; type M9642
Q907	48-869643	PNP; type M9643
Q908	48-869642	NPN; type M9642
		resistor, fixed ±5%; 1/4 W: unless otherwise stated
R901, 902	6-125A21	68; 1/2 W
R904	6-11009A56	2k
R905	6-11009A49	1k
R906	6-11009A51	1.2k
R907	6-11009A85	33k
R908	6-11009A59	2.7k
R909	6-11009A87	39k
R910	6-11009A85	33k
R911	18-82374N01	variable; 25k
R912	6-11009A84	30k
R913	6-11009A87	39k
R914	6-11009A95	82k
R915	6-11009A49	1k
R918	6-11009A39	390
R919	6-11009A29	150
R920	6-11009A25	100
R921	6-11009A43	560
R924	6-11009A71	8.2k
R925	6-11009A65	4.7k
R926	6-11009A35	270
R927	6-11009A05	15
R928	6-11009A23	82
R929	6-11009A71	8.2k
R930	6-11009B23	zero ohms
R931	18-82374N13	variable; 5k
R932	6-11009A27	120
R933	6-11009A31	180
R934	6-11009A33	220
R935	6-11009A81	22k
R936	6-11009A47	820
R937	6-11009A79	18k
R938	6-11009A63	3.3k
R939	18-82374N13	variable; 5k
R940	6-11009A63	3.9k
R941	6-11009A49	1k
R942	6-11009A99	120k
R943	6-11009A35	270
R950, 951	6-125A21	68; 1/2 W

REFERENCE SYMBOL	MOTOROLA PART NO.	DESCRIPTION
		integrated circuit: (see note)
U901	51-80067C03	dual operational amplifier
		mechanical parts
	9-80028A01	SOCKET, transistor (Q904)

note: For optimum performance, diodes, transistors, and integrated circuits must be ordered by Motorola part numbers.

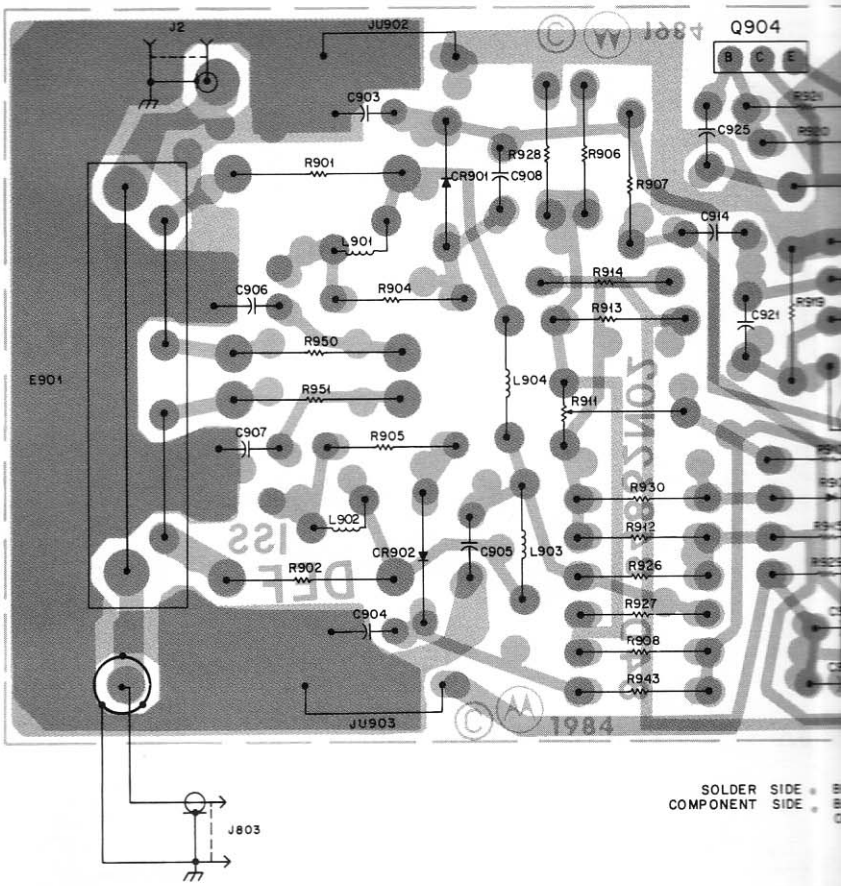

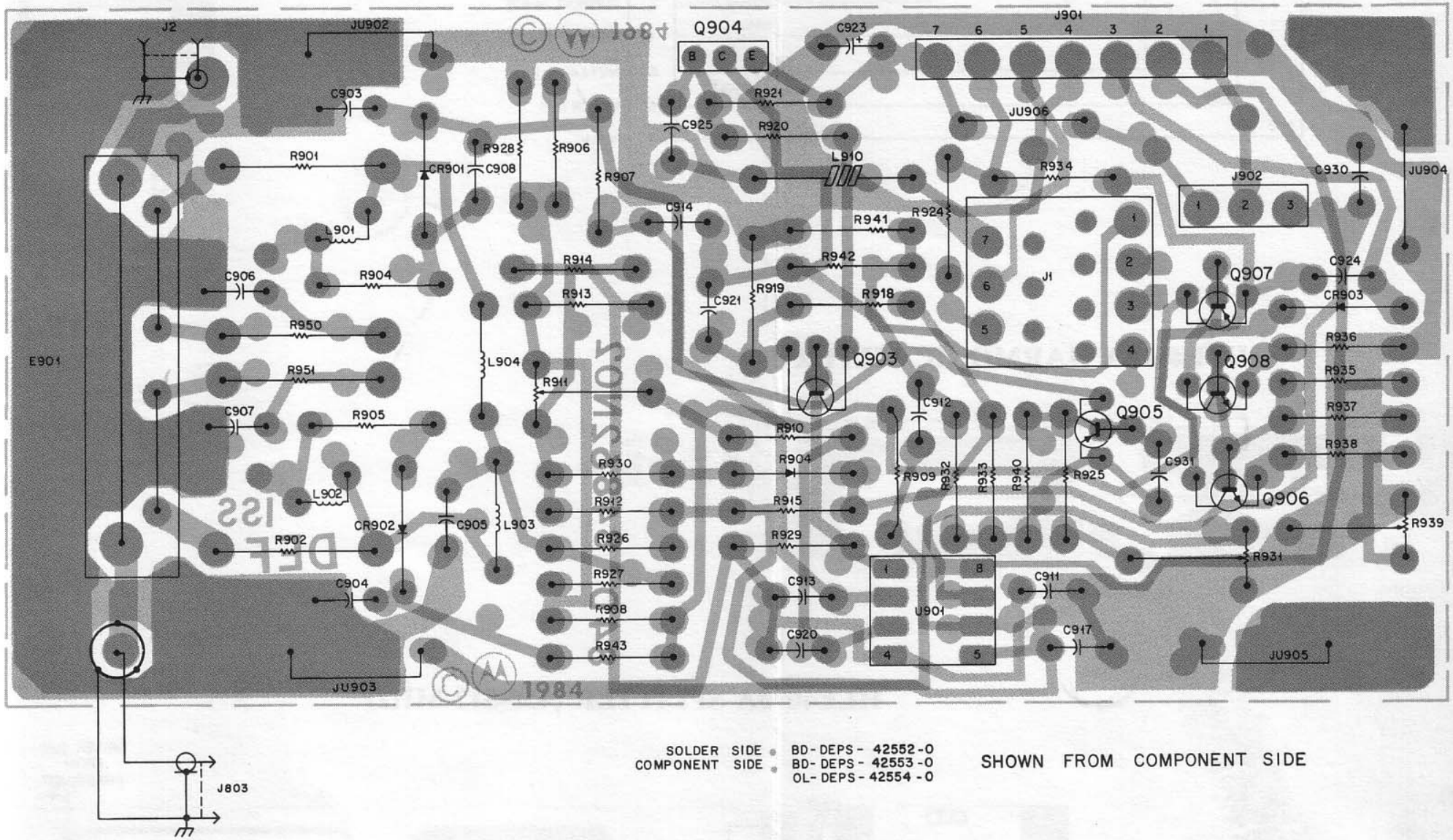

SOLDER SIDE BD-DEPS- 42552-0
COMPONENT SIDE BD-DEPS- 42553-0
OL-DEPS- 42554-0

SHOWN FROM COMPONENT SIDE

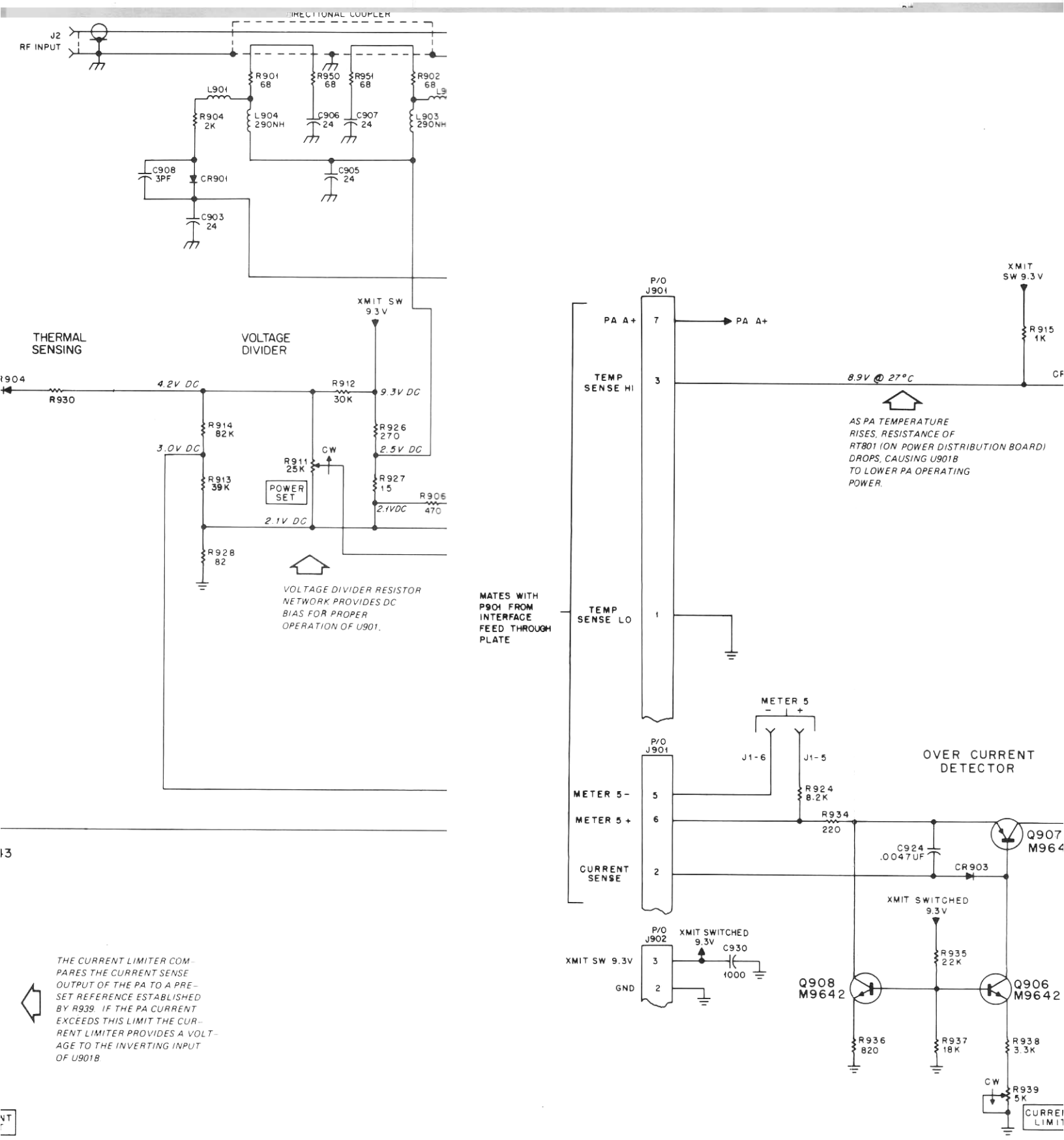

THE CURRENT LIMITER COMPARES THE CURRENT SENSE OUTPUT OF THE PA TO A PRESET REFERENCE ESTABLISHED BY R939. IF THE PA CURRENT EXCEEDS THIS LIMIT THE CURRENT LIMITER PROVIDES A VOLTAGE TO THE INVERTING INPUT OF U901B

CURRENT
LIMIT

VOLTAGE.

POWER AMPLIFIER DECK
MODEL TLE2280B SERIES

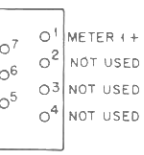

METERING DETAIL
OWN FROM
PONENT SIDE

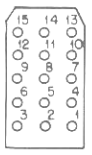

P801 DETAIL
SHOWN FROM MATING SIDE

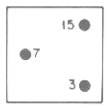

J801 DETAIL
SHOWN FROM PIN SIDE

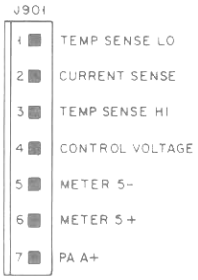

PLER SUPPLY VOLTAGE
ROUND (A-)
SW 9.3V

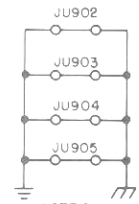

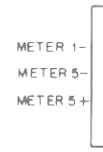

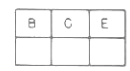

Q904 SOCKET DETAIL
SHOWN FROM COMPONENT SIDE

INTERCONNECT DETAIL

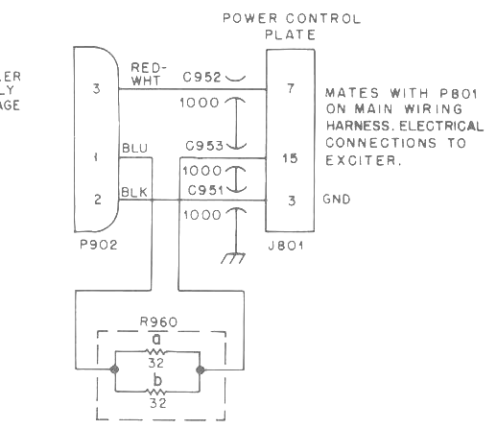

ROL VOLTAGE

PLIFY THE OUTPUT
VIDE THE CONTROL
LOWLEVEL
POWER AMPLIFIER.

NOTES

1. UNLESS OTHERWISE SPECIFIED RESISTOR VALUES ARE IN OHMS, CAPACITOR VALUES ARE IN PICOFARADS (PF) AND INDUCTOR VALUES ARE IN MICROHENRIES (UH).
2. JU902–JU905 ARE ALWAYS IN.
3. JU906 ALWAYS IN; JU907 ALWAYS OUT.

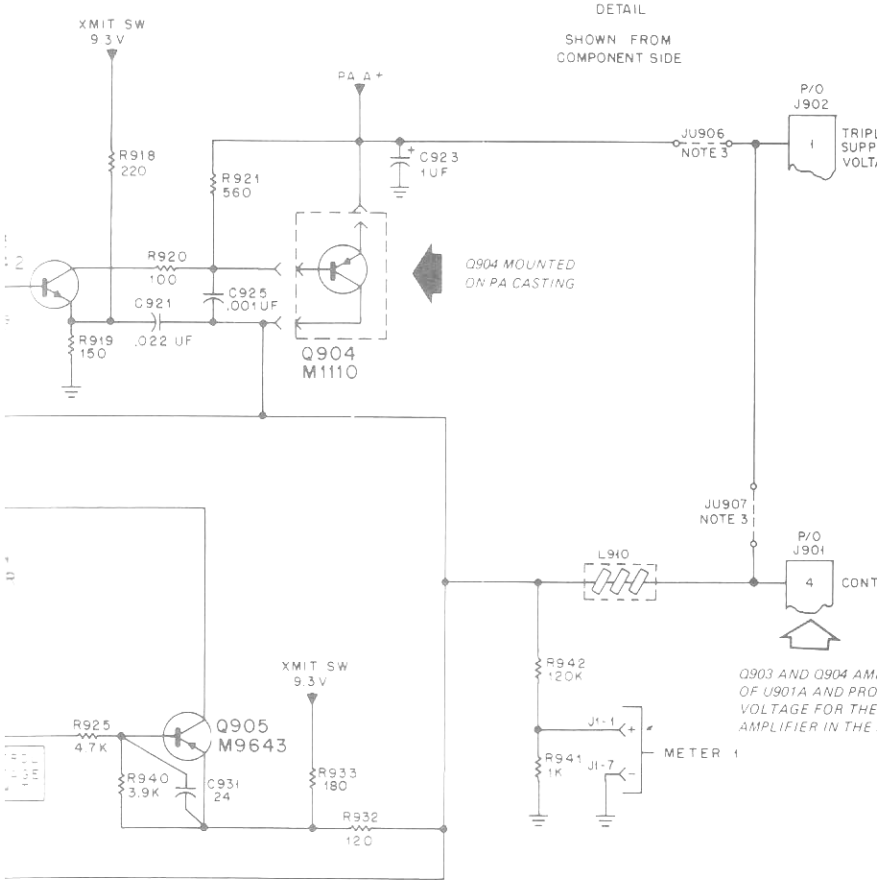

Q903 AND Q904 AM
OF U901A AND PRO
VOLTAGE FOR THE
AMPLIFIER IN THE

(1) PA CURRENT, (2)
ER (VSWR), (3) CONTROL
EXCITER AND (4) OPERATING
IF ANY OF THESE
EXCEED ALLOWABLE LIMITS
FEEDBACK SWITCH Q905
NG OUTPUT OF U901B (FAULT
CONDUCTS FEEDING THE
TO THE INVERTING INPUT
REDUCING THE CONTROL

EEPS-42551-A

TRN5696A Power Control Board
Schematic Diagram, Circuit Board Detail, and Parts List
Motorola No. ***PEPS-42068-C***
(Sheet 1 of 3)
5/20/86-PHI

POWER AMPLIFIER DECK
MODEL TLE2280B SERIES

parts list

TKN8871A Internal PA Cable — PL-8645-A

REFERENCE SYMBOL	MOTOROLA PART NO.	DESCRIPTION
		capacitor, fixed:
C881 thru 887	21-82812H03	.001 uF +100-0%
C891 thru 897	21-821474	470 pF ±20%; 500 V feed-thru
C951, 952, 953	21-82812H03	.001 uF +100-0%
		connector, receptacle:
J803	9-82442E01	female, single contact
J901	15-83498F28	housing, 3 contact
J902	15-83498F15	housing, 7 contact
		connector, plug:
P2	28-82331G01	male, single contact
P902	15-83498F15	housing, 7 contact
		resistor, fixed:
R960a, 960b	17-82177B02	32 ±5%; 5 W
		mechanical parts
	1-80775D04	ASSEMBLY, rf output cable ; includes: ref. item P2
	30-83794C04	CABLE, coaxial; 8-1/4" used
	1-80748D92	ASSEMBLY, power control cable includes: ref. item J803
	15-483599	HOOD, receptacle
	30-83794C01	CABLE, coaxial; 4-1/2" used
	42-10217A02	STRAP, tie
	1-80775D01	ASSEMBLY, UHF interface cable UHF includes: refer J902
	29-83499F01	TERMINAL; 7 used
	30-83678K01	CABLE, shielded: 7-conductor; 0.63" used
	4-83755H01	WASHER, shoulder; 10 used
	29-83499F01	TERMINAL; 3 used
	30-83678K01	CABLE, shielded: 7-conductor; 12-1/2" used
	31-490141	TERMINAL, strip
	42-10217A02	STRAP, tie
	64-82405N01	PLATE, plug
	64-82404N01	PLATE, rf
	64-80005A01	PLATE, feed-thru

TRN5706B A + Distribution Board — PL-9857-A

REFERENCE SYMBOL	MOTOROLA PART NO.	DESCRIPTION
		resistor, fixed:
R801	6-82575R01	.012 shunt
R802	6-11009A49	1k ±5%; 1/4 W
R806	6-11009A33	220 ±5%; 1/4 W
		thermistor:
RT801	6-83600K08	25k @ 25°C
		mechanical parts
	9-80155A02	CONNECTOR, flat wafer; 7 used

Non-Repairable Item, Parts Listed for Reference Only

HFE4014A Harmonic Filter Assembly — MXW-0779-O

REFERENCE SYMBOL	MOTOROLA PART NO.	DESCRIPTION
	30-80080B01	WIRE, inductor
	64-80067B01	PLATE, harmonic filter carrier
	84-80318A01	SUBSTRATE, plated

Power Amplifier Equipment
Circuit Board and Substrate Details,
and Parts Lists
Motorola No. ***PEPS-42068-C***
(Sheet 2 of 3)
5/20/86-PHI

TLE5623A PA Miscellaneous Parts (450-494 MHz)
TLE5624A PA Miscellaneous Parts (494-512 MHz) — PL-8452-B

REFERENCE SYMBOL	MOTOROLA PART NO.	DESCRIPTION
		capacitor, fixed: uf ±5%; 50 V: unless otherwise stated
C851, 852, 853	21-852185	36 pF ±5%; NPO
C857	21-82187B45	470 pF ±10%; 500 V
C858	8-83293B10	.033
C859	21-11014H05	1.5 (TLE5624A only)
C861, 862, 863	8-82905G40	.03
C864	8-83293B10	.33
C867	21-11014H05	1.5 ±0.25 pF; 100 V (TLE5623A only)
C868	21-11014H13	3.3 ±0.25 pF; 100 V (TLE5623A only)
C870	8-82905G40	.03 (TLE5624A only)
		coil:
E867, 868	76-84069B08	ferrite bead
		resistor, fixed: ±5%; 1/4 W: unless otherwise stated
R863, 864, 865	6-124B61	4.7
R866	6-11009A97	100k
R867	6-124B61	4.7
R868	6-11009A09	22
R869	6-00125A15	39 (TLE5624A only)
		mechanical parts
	30-83794C01	CABLE, coaxial (WHT); combiner output; 4" used (TLE5623A); 4.75" used (TLE5624A)

TLE5791A Low-Level Amplifier — PL-9744-O

REFERENCE SYMBOL	MOTOROLA PART NO.	DESCRIPTION
		capacitor, fixed, chip
C801	21-11059D76	10 pF
C802	21-11059D84	20 pF
C803	21-11059C13	22 pF
C804	21-11059D59	100 pF
C805	21-11059B23	.018 uF
C806	21-11059A05	5 pF
C807	21-11059A05	5 pF
C808	21-11059D59	100 pF
C809	21-11059D59	100 pF
C810	21-11059D89	1 uF
		diode:
CR801	48-11034A01	silicon
		coil:
L801, 803	24-83035N38	choke, 5 turns
L802, 804	01-80702T04	formed wire & bead
		transistor
Q801	48-82022N04	NPN, type M2204

HLE4155A Combiner (L) 403-430 MHz
HLE4065A Combiner (M) 450-494 MHz
HLE4066A Combiner (H) 494-512 MHz — PL-6268-D

REFERENCE SYMBOL	MOTOROLA PART NO.	DESCRIPTION
		capacitor, fixed, pF ±5%, 50 V: unless otherwise stated
C841, 842	21-84736E21	100
C843L	21-84736E31	56 ±10%
C843M, H	21-84736E21	100
C844, 845	21-84736E21	100
C846	21-5157A61	100
C847	21-84547A13	0.1 uF ±10%
C848	21-5157A61	100
C849	21-84547A13	0.1 uF ±10%
C855, 856	23-82783B24	15 uF, 25 V
		ferrite bead:
E812-814	76-83960B01	.138 0D x .118 LG
		coil:
L812-814	24-80071B01	choke; 6 turns
		resistor, fixed:
R807, 808	6-126D63	5.6 ±10%; 1 W

HLE4069A Splitter (Range 1)
HLE4070A Splitter (Ranges 2-4) — PL-6269-D

REFERENCE SYMBOL	MOTOROLA PART NO.	DESCRIPTION
		capacitor, fixed:
C827, 828	21-84736E21	100 pF ±5%; 50 V
ferrite bead:		
E809-811	76-83960B01	.138 0D x .118 LG
coil:		
L809-811	24-80090B01	choke; 6 turns
resistor, fixed:		
R810, 811	6-126C01	10 ±10%; 1 W

HLE4078A Pre-Driver Substrate (L) Range 1
HLE4079A Pre-Driver Substrate (M, H) Ranges 2-4 PL-6271-C

REFERENCE SYMBOL	MOTOROLA PART NO.	DESCRIPTION
		capacitor, fixed, pF ±5%, 50 V: unless otherwise stated
C817L	21-84736E15	12
C817M, H	21-84736E19	4.7 pF ± .25 pF
C823	21-5157A61	100
C824	21-84547A13	0.1 uF ±5%; 50 V
C825L	21-84736E29	7.5
C825M, H	21-84736E21	100
C826	21-5632D43	1.8 pF ±.25 pF; 50 V
		diode: (see note)
CR805	48-84616A01	hot carrier
		ferrite bead:
E805, 808	76-83960B01	.138 OD; .118 LG
		coil:
L805, 808	24-80090G01	choke; 6 turns
L815	24-82723H28	choke; .29 uH
		resistor, fixed:
R817M, H	6-124A03	12 ohms ±5%; 1/4 W
		mechanical parts
	55-80065B01	STRAP, driver
	55-80335A01	STRAP, driver line

note: For optimum performance, diodes, transistors, and integrated circuits must be ordered by Motorola part numbers.

HLE4083A Power Transistor Kit (450-494 MHz)
HLE4168A Power Transistor Kit (450-494 MHz) PL-6272-C

REFERENCE SYMBOL	MOTOROLA PART NO.	DESCRIPTION
		capacitor, fixed; pF ±5%; 250V: unless otherwise stated
C810, 811	21-84366F04	30
C812	21-84736E33	30; 50V
C819 thru 821	21-84366F04	30
C822	21-84366F06	45
C829 thru 834	21-83466F04	30
C835, 837, 839	21-84366F04	30
C836, 838, 840	21-84366F06	45
		transistor: (see note)
Q803	1-80701T78	module kit; includes ref. items C810 thru 812
Q804 thru 807	1-80703T04	module kit; (HLE4083A only) includes ref. items C819 thru 822 and C829 thru 840
Q804 thru 807	1-80705T41	module kit; (HLE4168A only) includes ref. items C819 thru 822 and C829 thru 840
		note Transistors Q804 thru 807 must be the same module kit number and cannot be intermixed. If ordering a replacement transistor in a power transistor kit, it must be ordered by its appropriate module kit number (stamped on the module) and not by its transistor type or part number.

HLE4082A Power Transistor Kit (403-430 MHz)L
HLE4083A Power Transistor Kit (450-494 MHz) M
HLE4084A Power Transistor Kit (494-512 MHz) H PL-6857-B

REFERENCE SYMBOL	MOTOROLA PART NO.	DESCRIPTION
		capacitor, fixed: ±5°; 250 V
C810, 811	21-84366F04	30 pF
C812	21-84736E33	30 pF
C819, 820, 821	21-84366F04	30 pF
C822	21-84366F06	45 pF
C829 - 834	21-84366F04	30 pF
C835, 837, 839	21-84366F04	30 pF
C836, 838, 840	21-84366F06	45 pF
		transistor: (see note)
Q803	1-80701T78	module kit includes refer. C810, 811, 812
Q804 - 807L, M	1-80703T04	module kit includes refer. C819 - 822, 829 - 840
	or 1-80705T41	module kit includes refer. C819 - 822, 829 - 840
Q804 - 807H	1-80701T77	module kit includes refer. C819 - 822, 829 - 840
	or 1-80705T42	module kit includes refer. C819 - 822, 829 - 840
		note Transistors Q804 Q807 must be the same module kit number and cannot be intermixed. When ordering a replacement transistor in a power transistor kit; it must be ordered by its appropriate module kit number (stamped on module) and not by its transistor number.

HLE4074A Driver Input Substrate (Current Version) PL-6270-D

REFERENCE SYMBOL	MOTOROLA PART NO.	DESCRIPTION
		capacitor, fixed:
C816	21-84547A05	.01 uF ±20%; 50 V
C818	21-5157A07	100 pF ±20%
C850, 860	23-82783B24	15 uF ±20%, 25 V
		ferrite bead:
E806, 807	76-83960B01	.138 0D X.118 LG
		coil:
L806, 807	24-80090G01	choke; 6 turns
		resistor:
R820	6-11009C18	51 ohms ±5%; 1/4 W

TRN5708A Power Amplifier Hardware PL-8646-B

REFERENCE SYMBOL	MOTOROLA PART NO.	DESCRIPTION
		capacitor, fixed:
C870, 871	21-84211B01	10k pF: feed-thru; 500 V
		coil:
E881 thru 887	76-80117D01	core, ferrite bead
		connector, receptacle:
J802	9-82442E01	female; single contact
		transistor: (see note)
Q904	48-84411L10	PNP, type M1110
		mechanical parts
	2-131435	NUT, 4-40 × 1/4 × 3/32"; 2 used
	3-3375	SCREW, tapping: 6-32 × 5/16"; 10 used
	3-3398	SCREW, tapping: 6-32 × 3/8"; 6 used
	3-115213	SCREW, machine: 3-48 × 1/4"; 4 used
	3-129841	SCREW, machine: 4-40 × 1/4"
	3-129890	SCREW, machine: 10-32 × 3/8", 6 used
	3-131195	SCREW, machine: 6-32 × 3/8"; 3 used
	3-134186	SCREW, tapping: 6-32 × 5/16"; 4 used
	3-138294	SCREW, tapping: 8-32 × 5/8"
	3-138295	SCREW, tapping: 8-32 × 3/8"
	3-138810	SCREW, machine: 4-40 × 5/8"; 2 used
	3-138813	SCREW, machine: 4-40 × 3/8"; 10 used
	3-488006	SCREW, machine: 6-32 × 1/2"; 4 used
	4-7681	LOCKWASHER, #3; internal; 4 used
	4-114136	WASHER, Felt
	4-858060	WASHER, insulator; 4 used
	4-84180C01	WASHER, shoulder
	7-80078A01	BRACKET, Transmit Mount
	14-83269P01	INSULATOR
	14-82406N01	INSULATOR, control
	14-82407N01	INSULATOR, feed-thru
	14-84391F01	INSULATOR, transistor
	15-83224P01	COVER, filter
	15-82400N01	COVER, PA
	26-80254A01	HEAT SINK, LL amp
	26-82323N02	HEAT SINK, PA
	26-83200P01	SHIELD, interface
	26-83374N01	SHIELD, filter; 3 used
	29-5347	LUG, soldering; 2 used
	29-5370	LUG; 2 used
	29-82925P01	LUG, Solder
	30-83794C01	CABLE, coaxial (WHT); 6.20" used
	31-50378	TERMINAL, board
	32-83273P01	GASKET, filter; 2 used
	32-83291N01	GASKET, RF; 55" used
	42-10217A02	WRAP, tie
	42-80137A02	CLIP
	42-84510M04	STRAP, PA; 4 used
	64-82986N01	PANEL, PA

HLE4066A COMBINER (494-512

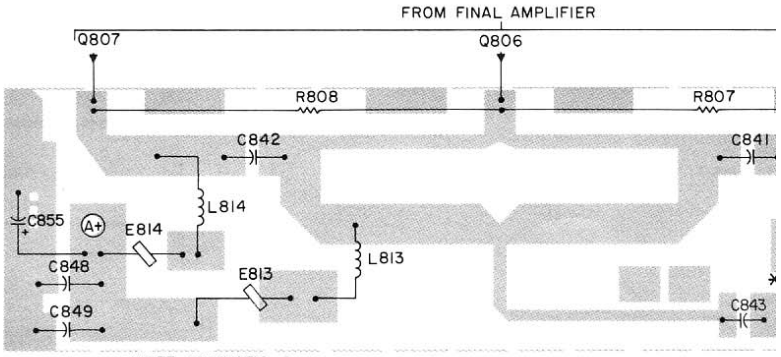

BD-BEPS-36288-
OL-BEPS-36974-

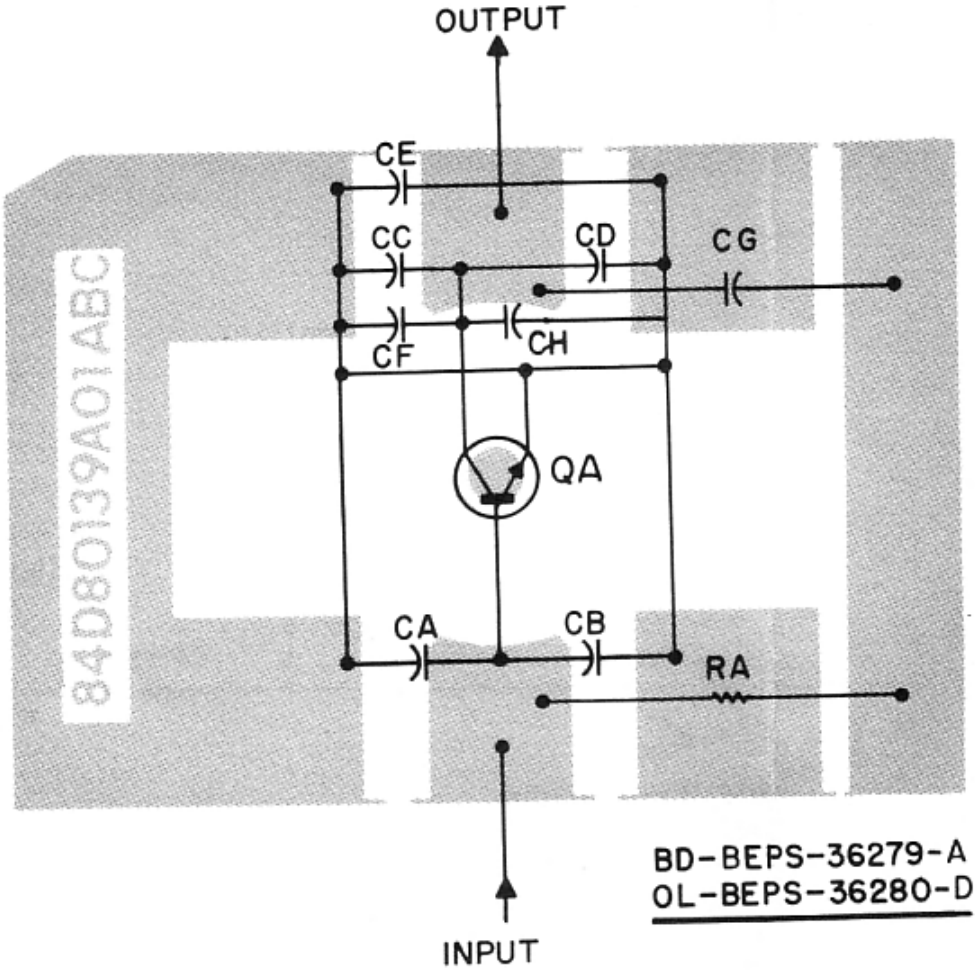

POWER TRANSISTOR SUBSTRATE

450-494 MHz

QA	CA	CB	CC	CD	CE*	CF*	CH
Q803	C810	C811	C812				C864
Q804	C819	C820	C821	C822		C857	C858
Q805	C829	C830	C835	C836	C851	C861	
Q806	C831	C832	C837	C838	C852	C862	
Q807	C833	C834	C839	C840	C853	C863	

*Part of TLE5623A.

494-512 MHz

QA	CA	CB	CC	CD	CE*	CF*	CG*	RA*
Q803	C810	C811	C812				C870	R869
Q804	C819	C820	C82	C822				
Q805	C829	C830	C835	C836	C851	C861		
Q806	C831	C832	C837	C838	C852	C862		
C807	C833	C834	C839	C840	C853	C863		

*Part of TLE5624A.

HLE4079A PRE-DRIVER SUBSTRATE

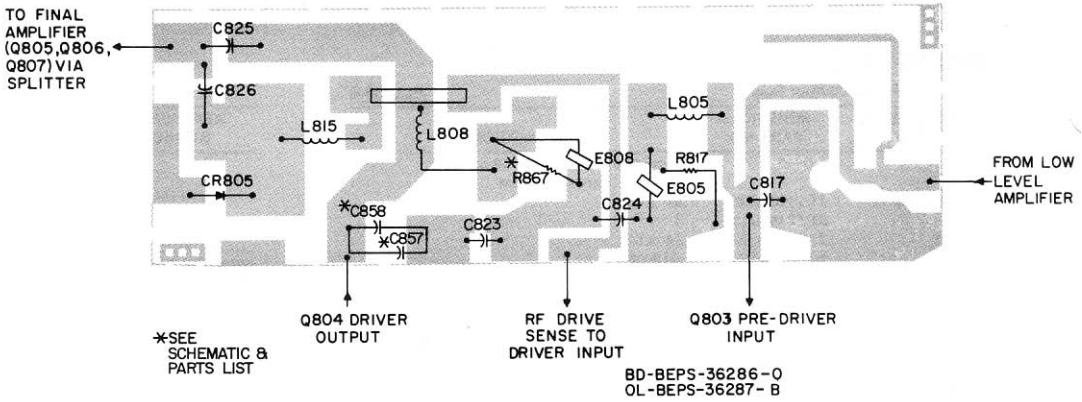

HLE4074A DRIVER INPUT SUBSTRATE

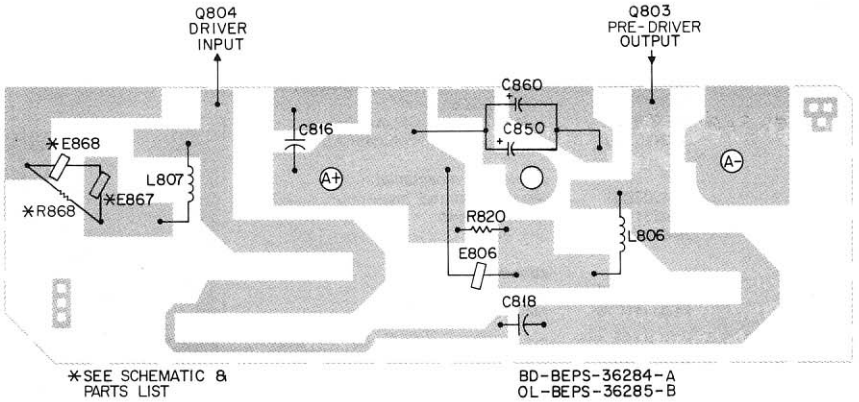

TLE5791A LOW LEVEL AMPLIFIER

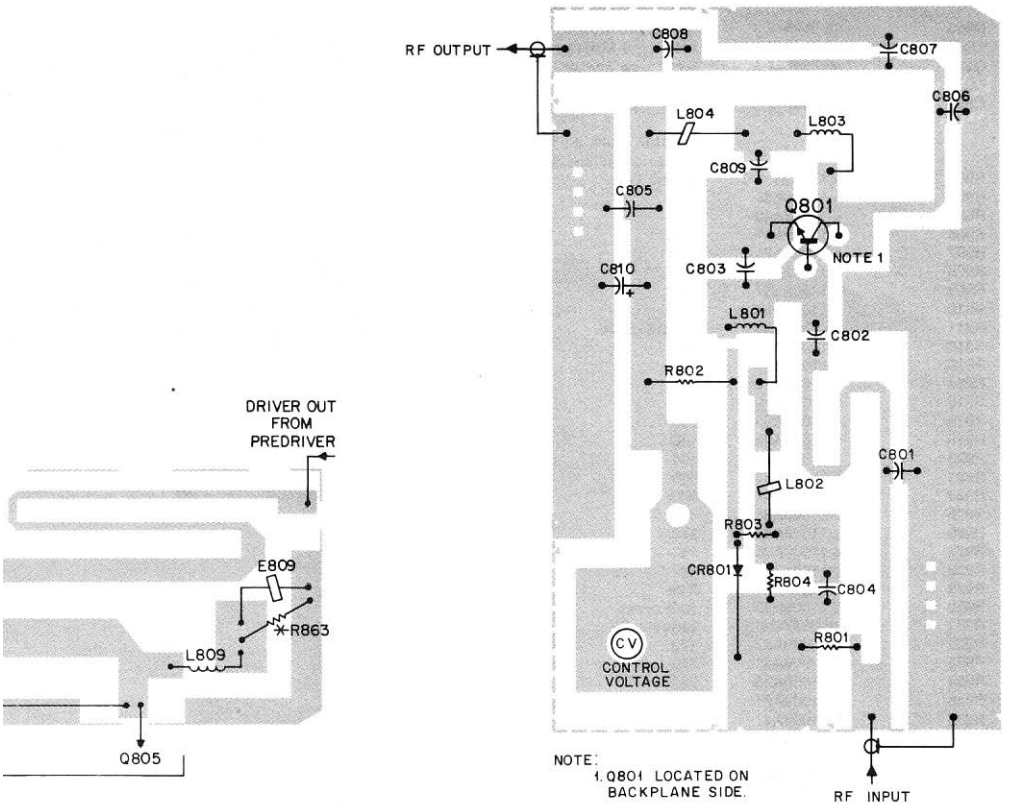

:EPS-36281-A
:EPS-36283-B

SOLDER SIDE BD-CEPS-41885-O
OL-CEPS-41886-O

TRN5706B A+ DISTRIBUTION BOARD

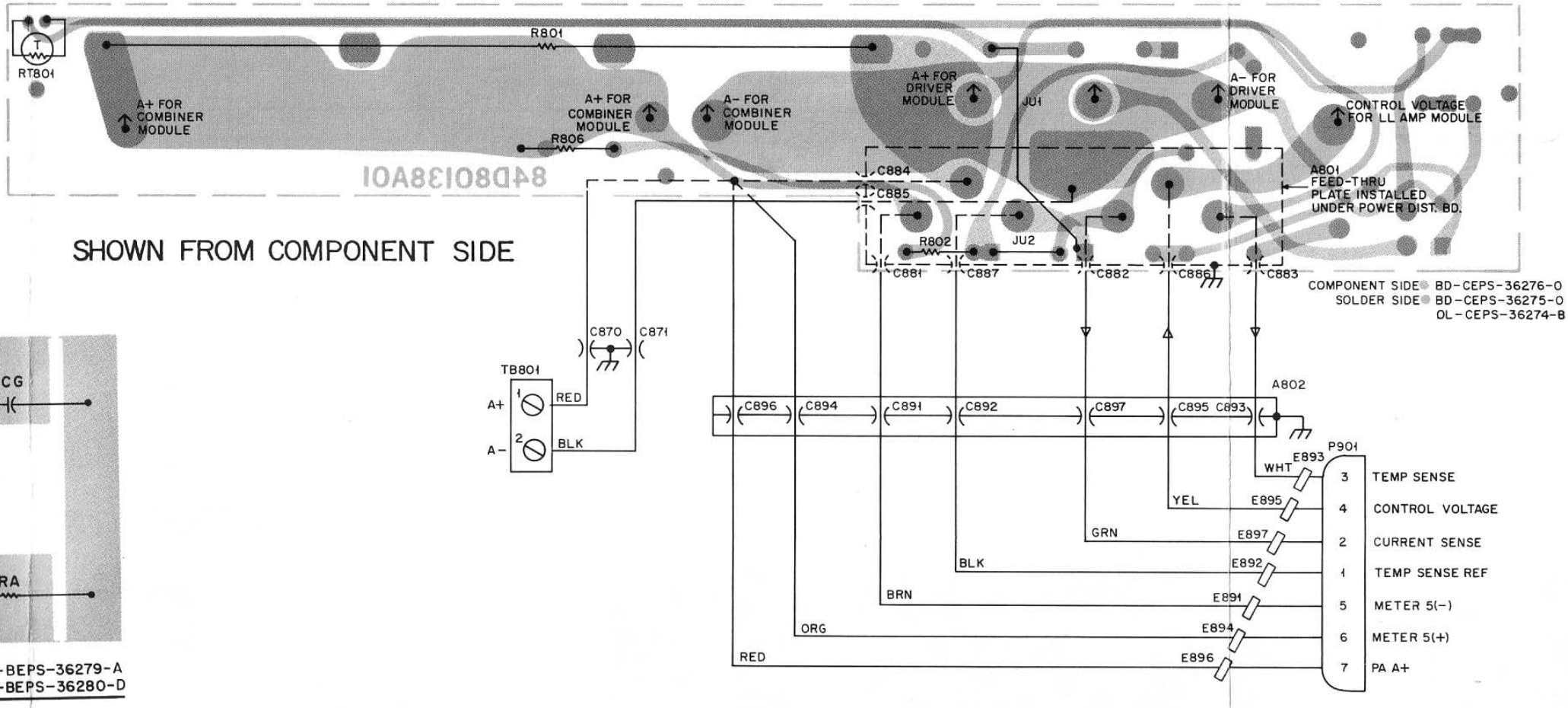

SHOWN FROM COMPONENT SIDE

D-BEPS-36279-A
L-BEPS-36280-D

SUBSTRATE

CE*	CF*	CH
		C864
	C857	C858
C851	C861	
C852	C862	
C853	C863	

*	CF*	CG*	RA*
		C870	R869
1	C861		

HFE4014A HARMONIC FILTER

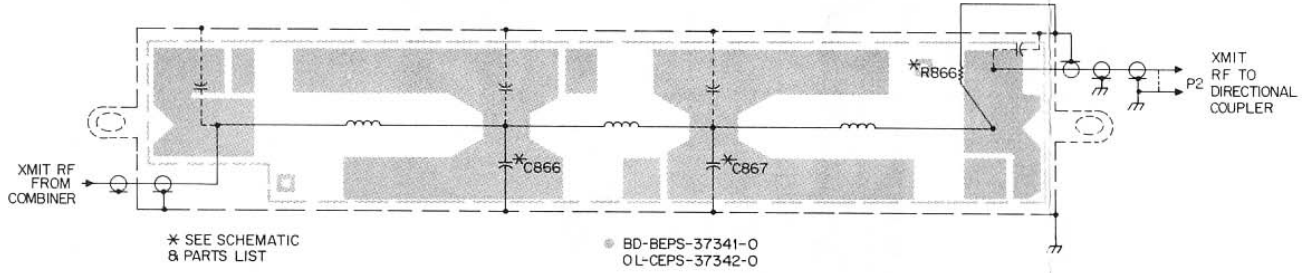

HLE4065A COMBINER (450-494 MHz)

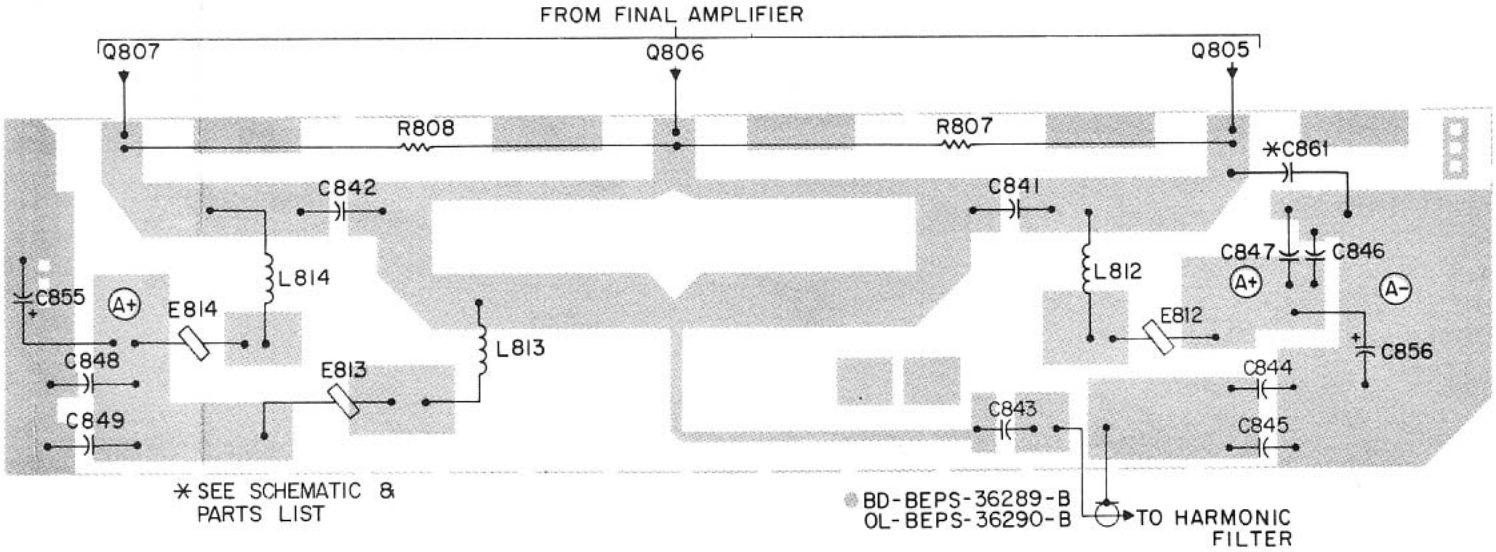

HLE4070A SPLITTER (450-512 MHz)

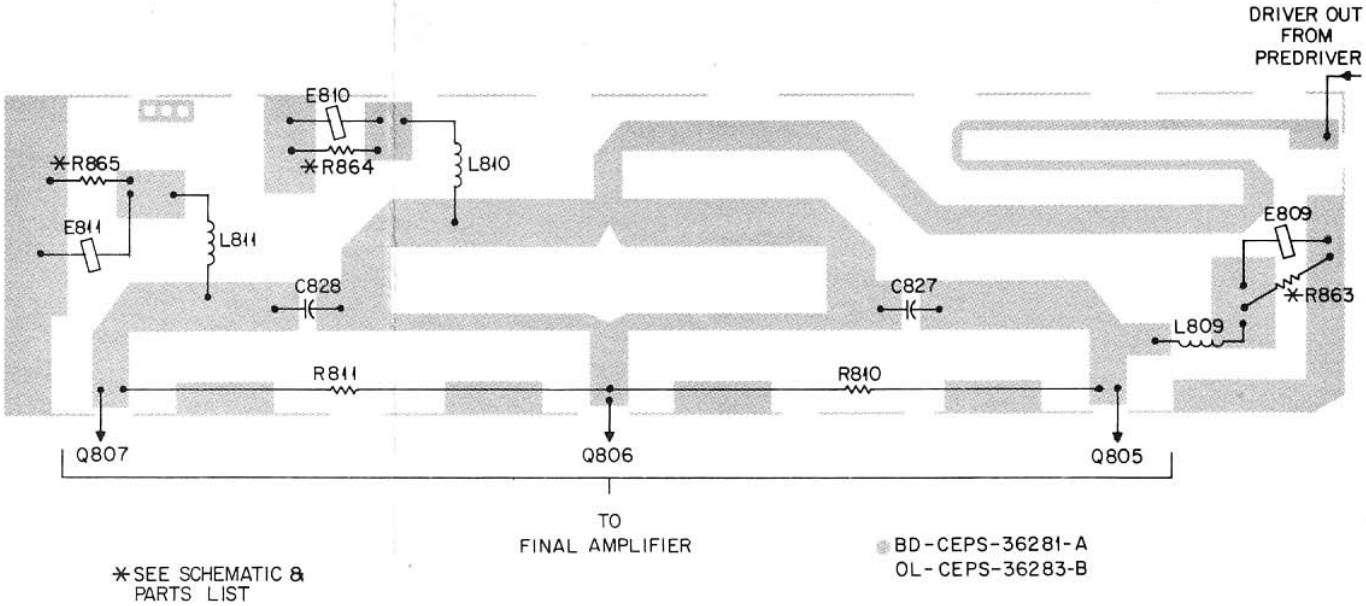

W / 100W POWER AMPLIFIER
(450-494 MHZ) TLE 2283B
(494-512 MHZ) TLE2284B

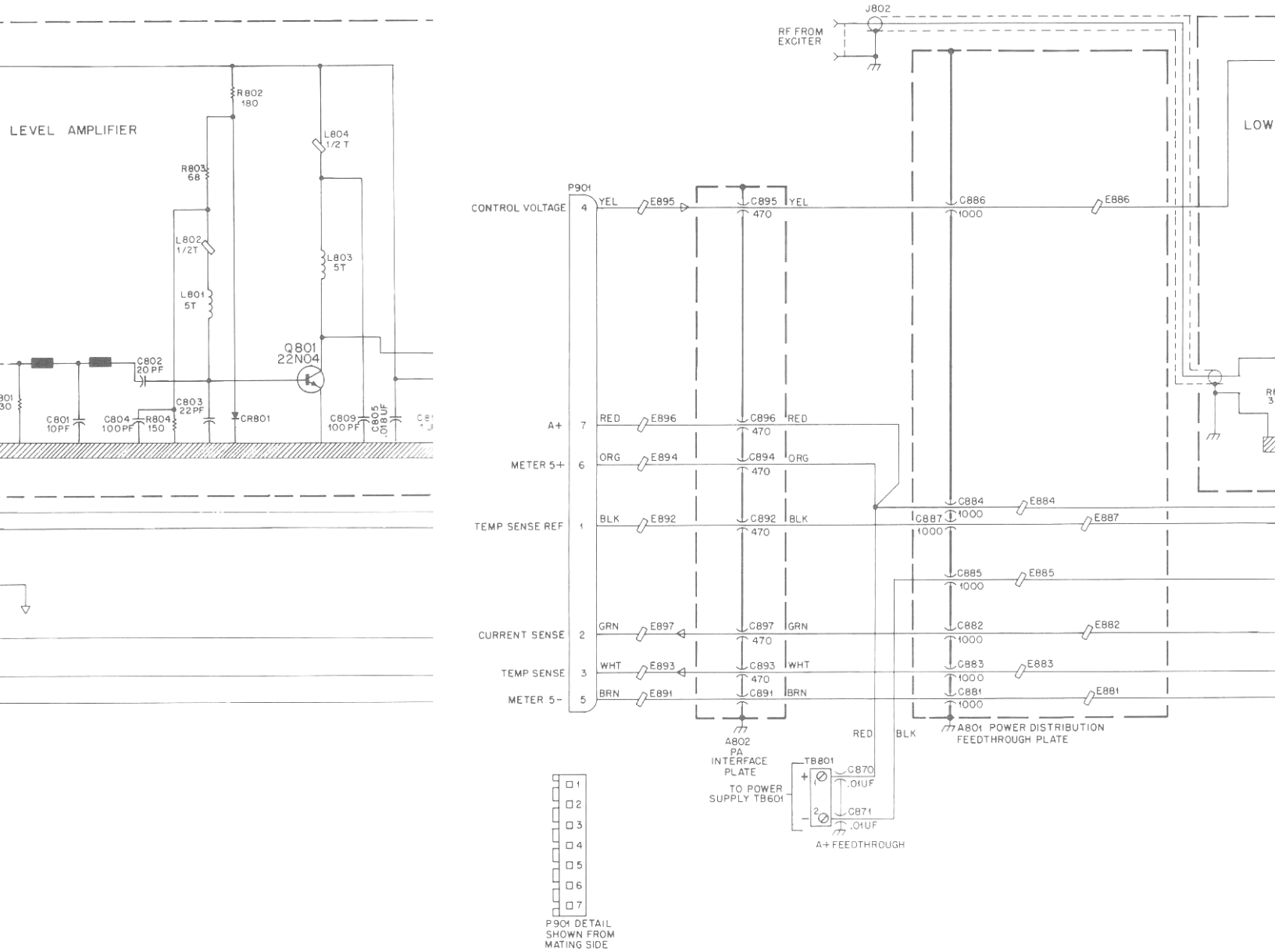

MATING SIDE

POWER AMPLIFIER DECK

MODEL TLE2280B SERIES

MOTOROLA INC.
Communications Sector

MSR 2000™
UHF PREAMPLIFIER
FIELD INSTALLED OPTION MODEL TLE2403A
FACTORY INSTALLED OPTION MODEL C12AJ

1. INTRODUCTION

The UHF preamplifier is an optional accessory that improves receiver sensitivity of the *MSR 2000* Base Station. This manual describes the hardware, installation, theory of operation, and maintenance of the preamplifier for the *MSR 2000* 1 and 2-receiver base stations.

2. DESCRIPTION

The TLE2403A Preamplifier Field Installed Kit or Factory Installed Option C12AJ consist of a TRN9168A Antenna Relay, and a TLE2393A UHF Preamplifier. The preamplifier contains input filtering and matching, and single stage low noise bipolar transistor, and control and protection circuitry. The preamplifier printed circuit board is mounted in a metal housing. A rear cover with an angled mounting slot is fastened to the back of the chassis housing, via 8-screws. This rear cover provides easy access to the printed circuit board and holds the preamplifier to the base station. The housing also contains an input connector labeled IN (J102) and an output connector labeled OUT (J101). Preamplifier power and control is connected to the KEYED A-, and A+ lines, via two feed-through capacitors. Refer to Figures 1 and 2.

3. FIELD INSTALLATION INSTRUCTIONS
(Refer to Figures 1 through 4.)

The following describes the field installation of the TLE2403A Preamplifier into the *MSR 2000* 1 or 2-receiver base station. Installation of the antenna switch is described in the attached section 68P81064E84.

Step 1. For later reference, pay close attention to how the transmitter and receiver rf cables are routed to the antenna relay.

Step 2. Remove TRN5864A Antenna Relay, and install TRN9168A Antenna Relay. Route transmitter cable exactly as before.

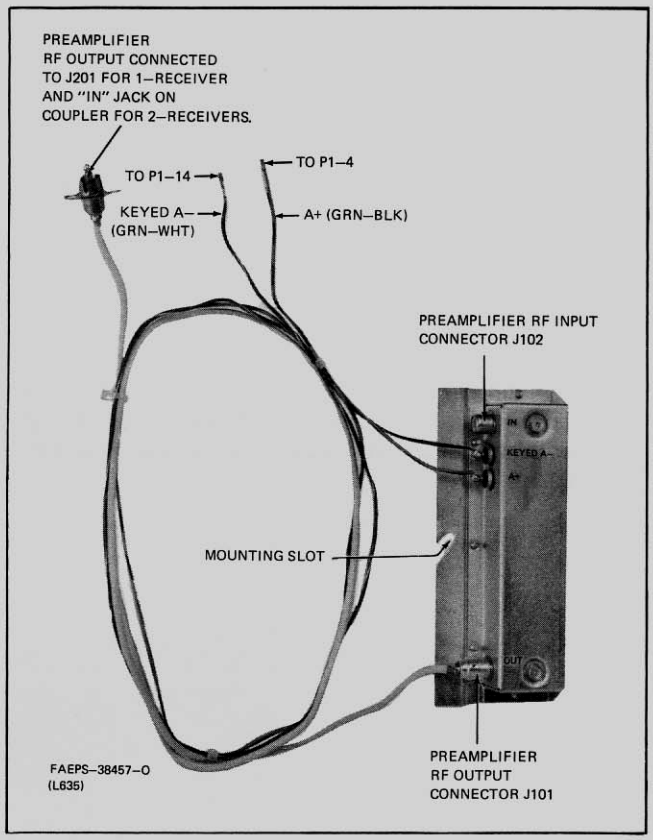

Figure 1. UHF Preamplifier

Step 3. Plug the receiver cable (P102) from TRN9168A Antenna Relay into the IN input connector (J102) of the preamplifier.

PERFORMANCE SPECIFICATIONS

Operating Frequency	440-520 MHz
Power Gain	10 dB min.
Noise Figure	3.5 dB max.
Temperature Range	-30°C to +60°C
Size	12.70cm (5")H × 5.72cm
(2-1/4")W × 2.54cm (1")D	
Termination Connectors	Phone Female

©Motorola, Inc. 1985
All Rights Reserved
Printed in U.S.A.

technical writing services
1301 E. Algonquin Road, Schaumburg, IL 60196

68P81114E65-A
11/15/85 -PHI

Step 4. Start threads of the mounting screw in the right rear rail of the station (see Figures 3 and 4).

Step 5. Hook the angled mounting slot of the preamplifier into the screw, and tighten the screw to secure the preamplifier.

Step 6a. 1-Receiver Station

- Route A+, KEYED A−, and the rf output cables along the bottom of the station, until they meet with the station's main cable. Tie wrap where necessary.
- Plug the rf output cable connector P201 into the receiver connector J201.
- Unplug the main cable connector plug P1 from the mother board. Insert A+ cable (green-black) lug into pin 4 slot of the connector P1. Insert KEYED A− cable (green-white) lug into pin 14 slot.
- Plug main cable connector P1 back into the mother board.
- Installation complete.

Step 6b. 2-Receiver Station

- Route preamplifier rf output cable along the back of the station and connect the phone plug at the end of the cable into the 2-receiver coupler IN jack, as shown in Figure 4.
- Route A+, and KEYED A− cables along the bottom of the station, until they meet with station's main cable. Tie wrap where necessary.
- Unplug the main cable connector P1 from the mother board. Insert A+ cable (green-black) into the pin 4 slot of connector P1. Insert KEYED A− cable (green-white) into the pin 14 slot.
- Plug station main cable connector P1 back into the mother board connector.
- Installation complete.

4. THEORY OF OPERATION

(Refer to Schematic Diagram.)

4.1 The receive port of the antenna switch is connected to the input (J102) of the preamplifier. The received signal from the antenna travels through a high pass filter into transistor Q125, a low noise bipolar class A rf amplifier. Next the signal travels through the output network which matches Q125 to 50-ohms output impedance. This output (J101) is connected to the rf input of the receiver. Q126 is a current source which supplies current to Q125.

4.2 Transistors Q127 and Q128 are switches which turn the rf preamplifier on or off. In the receive mode, KEYED A− is high (+13.8 V). This turns on Q128

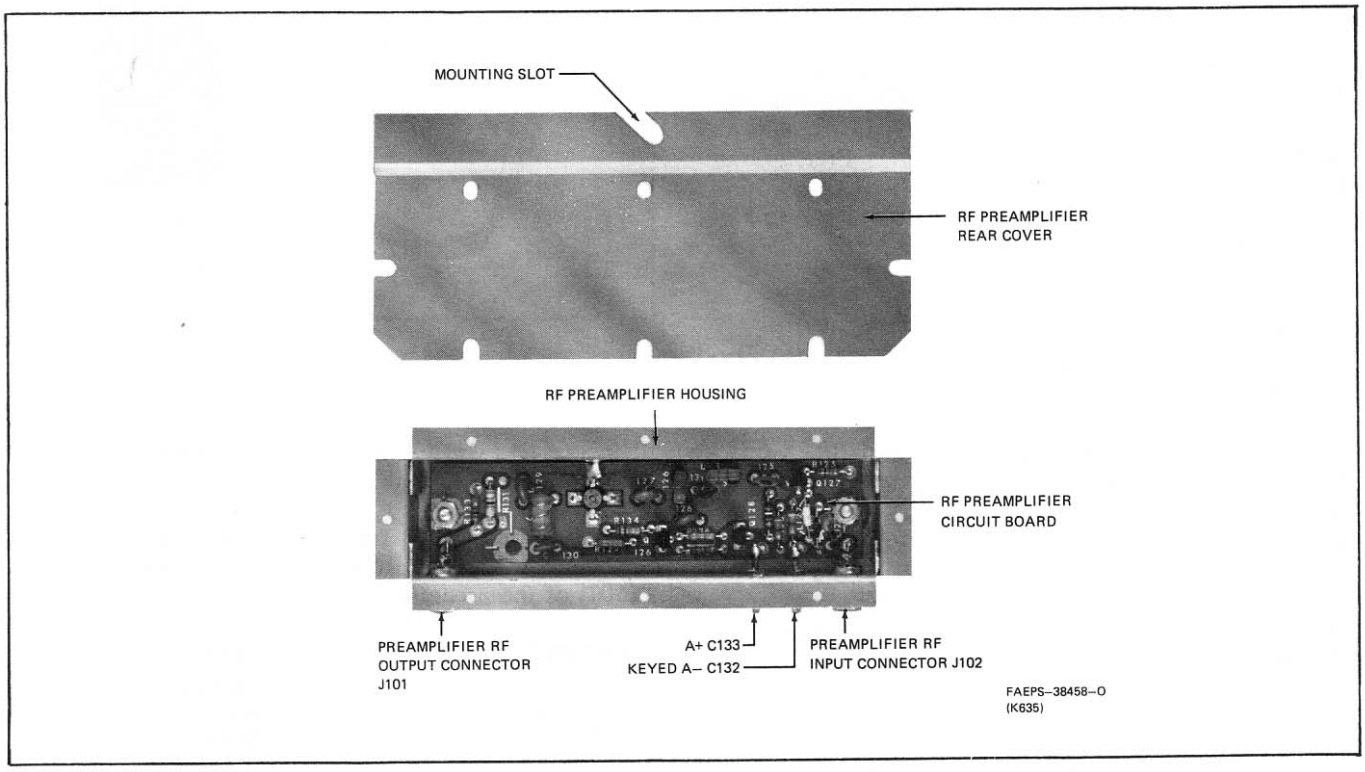

Figure 2. UHF Preamplifier Rear View with Rear Cover Removed

Step 1. Measure receiver sensitivity without the preamplifier.

Step 2. If receiver sensitivity is within specifications, then check rf cables for excessive loss.

Step 3. If no excessive loss can be detected then check the dc voltages provided in Table 1. It lists proper voltage levels for components on the circuit board.

Table 1. DC Voltage Levels

Where Measured	Receive Mode	Transmit Mode
A+ Feedthru Capacitor	+13.8 V	+13.8 V
Keyed A− Feedthru Capacitor	+13.8 V	0 V
Emitter Q128	+9.5 V	0 V
Collector Q127	0 V	+10 V
Collector Q125	+8.7 V	0 V
Cathode CR125	0 V	+9 V

Note: If voltages are ok, then replace Q125.

which provides forward bias to Q126 and Q125, and the rf preamplifier is turned on. In the transmit mode, KEYED A− is low (0 V). Transistor Q128 is turned off thus removing bias from Q125 and Q126. Q127 is turned on. Q127 forward biases CR125, which allows rf signals to pass through CR125 and C128 to ground. This prevents high level rf signals from damaging Q125 during transmit.

5. MAINTENANCE

This section provides troubleshooting procedures for the preamplifier. Poor sensitivity and improper voltage levels are generally the result of a malfunction. The following procedure checks the preamplifier for poor sensitivity.

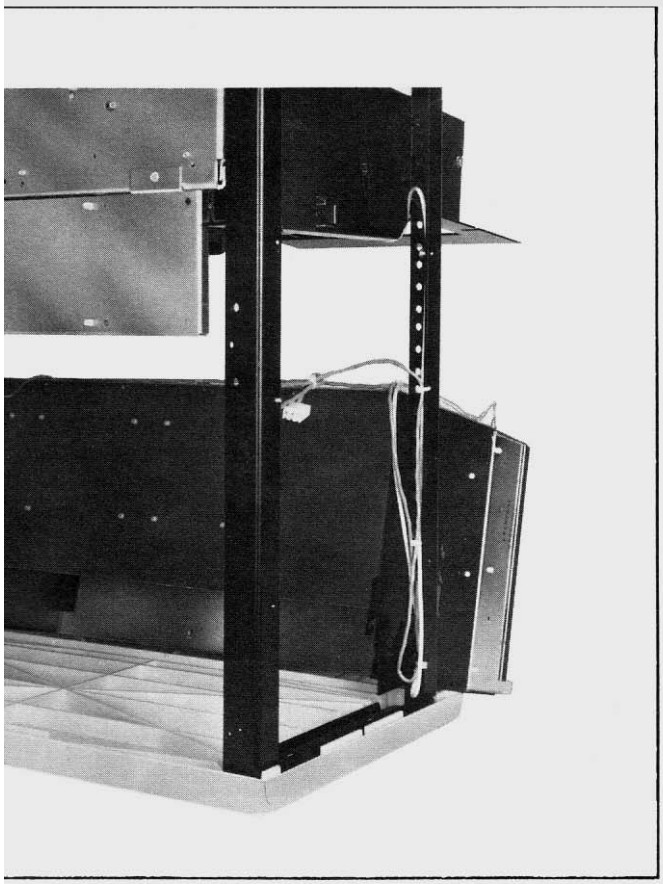

er Base Station

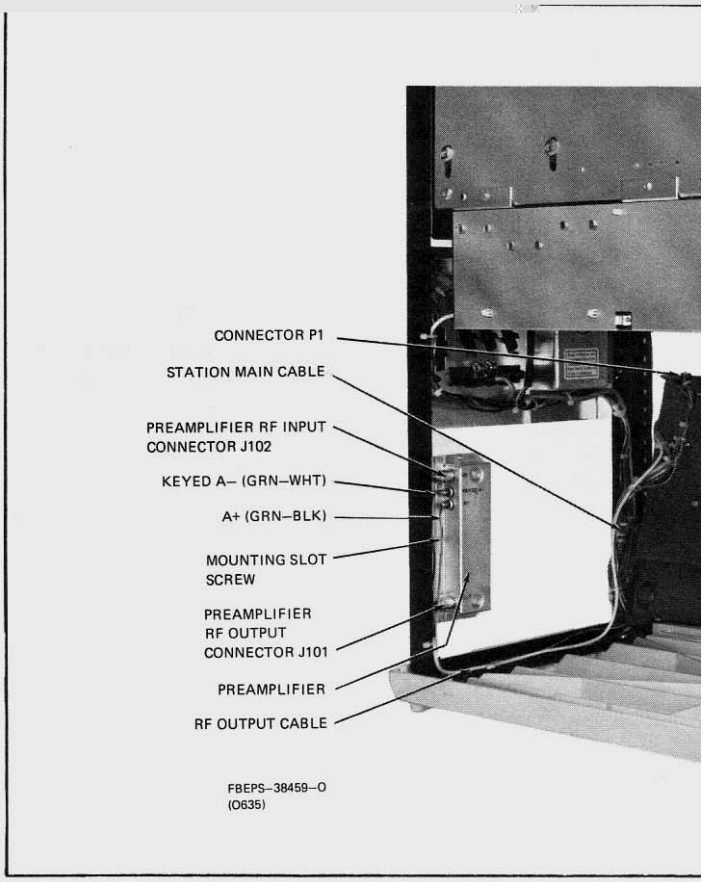

Figure 3. 1-Receiv

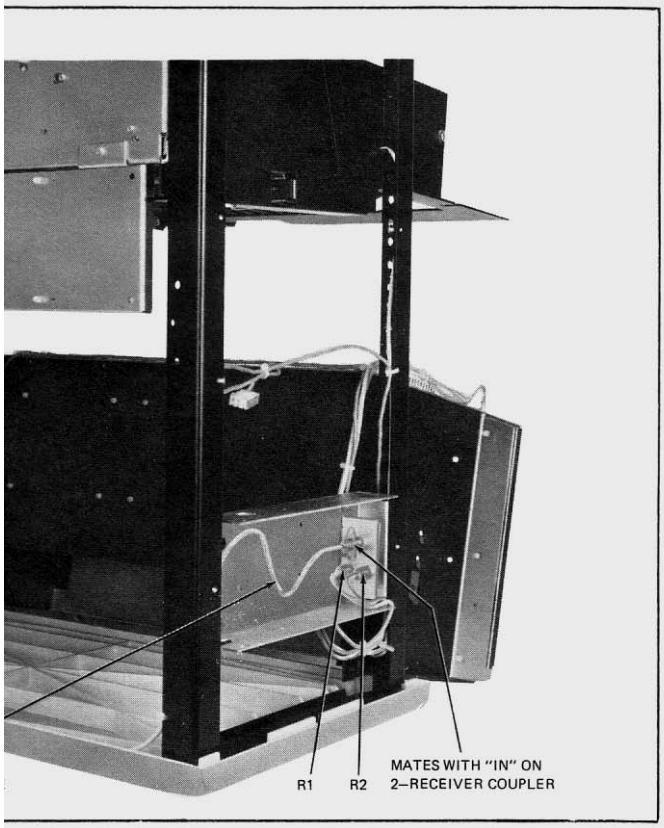

er Base Station

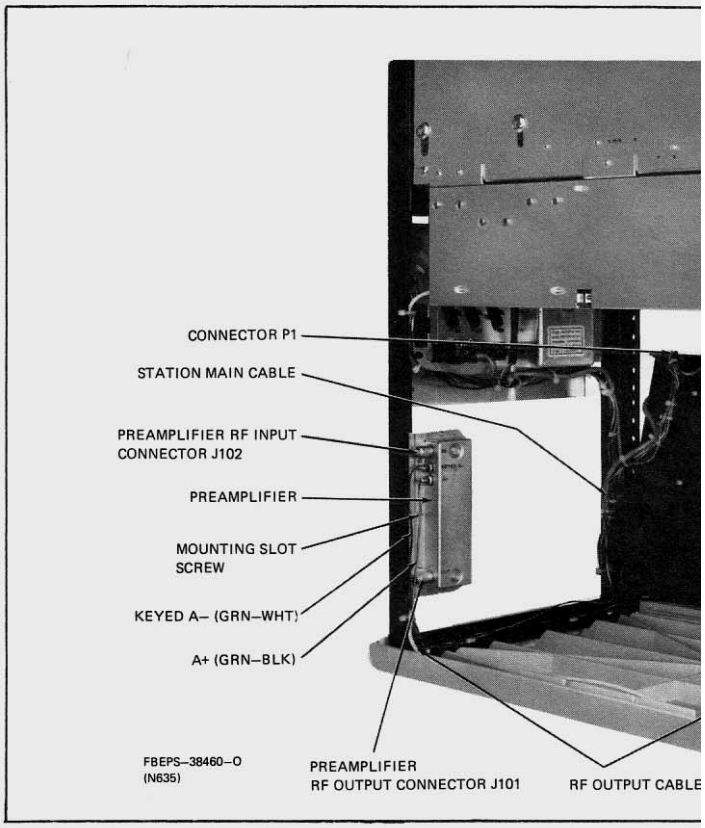

Figure 4. 2-Receive

parts list

Figure 4. 2-Receiver Base Station

PL-8861-O

N

TLE5571A Preamplifier Board

REFERENCE SYMBOL	MOTOROLA PART NO.	DESCRIPTIO
		capacitor, fixed:
C125	21-11014H21	6.8 pF ± 0.5 pF; 100 V
C126	21-11014H13	3.3 pF ± 0.25 pF; 100 V
C127	21-11014H23	8.2 pF ± 0.5 pF; 100 V
C128	21-11022G33	13 pF ± 5%; 50 V
C129	21-11014H13	3.3 pF ± 0.25 pF; 100 V
C130	21-11014H36	30 pF ± 5%; 100 V
C131	21-11022G42	33 pF ± 5%; 50 V
		diode: (see note)
CR125	48-83510F04	silicon
		coil, rf:
L125, 126	24-11030C05	coded (GRN)
L127	24-82723H28	choke; 290 nH
L129	24-83884G07	2.5 turns
		transistor: (see note)
Q125	48-869870	NPN; type M9870
Q126, 127	48-869643	PNP; type M9643
Q128	48-869642	NPN; type M9642
		resistor, fixed: ± 5%; 1/4 W: unless otherwise stated
R125	6-11009A49	1k
R126	6-11009A69	6.8k
R127	6-11009A83	27k
R128	6-11009A27	120
R132	6-11009A13	33
R133	6-11009A25	100
R134	6-11009A73	10k
R135, 136	6-11009A65	4.7k
R138	6-11009A39	390

PL-8862-A

ON

ne)

r #1 includes:

33" used
& Feedthru;

3
used
r
2 used
5/16"
9/16"; 2 used
1/4"; 8 used
lder; 2 used

5 used
used

ated circuits must

TRN9165A Preamplifier Hardware

REFERENCE SYMBOL	MOTOROLA PART NO.	DESCRIPTI
		capacitor, fixed:
C132, 133	21-861219	1000 uF + 100-0%
		connector, receptacle:
J101, 102	9-83663C01	female, single contact
		connector, plug:
P101	28-82875N01	male, single contact (phc
P102	28-84282D01	male, single contact
		mechanical parts
	1-80736D03	Assembly Cable; Receive P101, 102
	5-82050H04	EYELET; 2 used
	30-83794C01	CABLE, coaxial (WHT)
	1-80768D72	Assembly Bracket Phonc includes: J101, 102 and C132, 13
	4-83755H01	WASHER, shoulder; 2
	15-83220P01	HOUSING, preamplifie
	2-131435	NUT, 4-40 × 1/4 × 3/32"
	3-134186	SCREW, tapping: 6-32 ×
	3-134268	SCREW, tapping: 4-40 ×
	3-136891	SCREW, tapping: 4-24 ×
	4-691205	WASHER, insulator shou
	15-83221P01	COVER, preamplifier
	42-10217A02	STRAP, tie: .091 × 3.62"
	29-84249N01	TERMINAL, receptacle; 2

note: For optimum performance, diodes, transistors, and integr be ordered by Motorola part numbers.

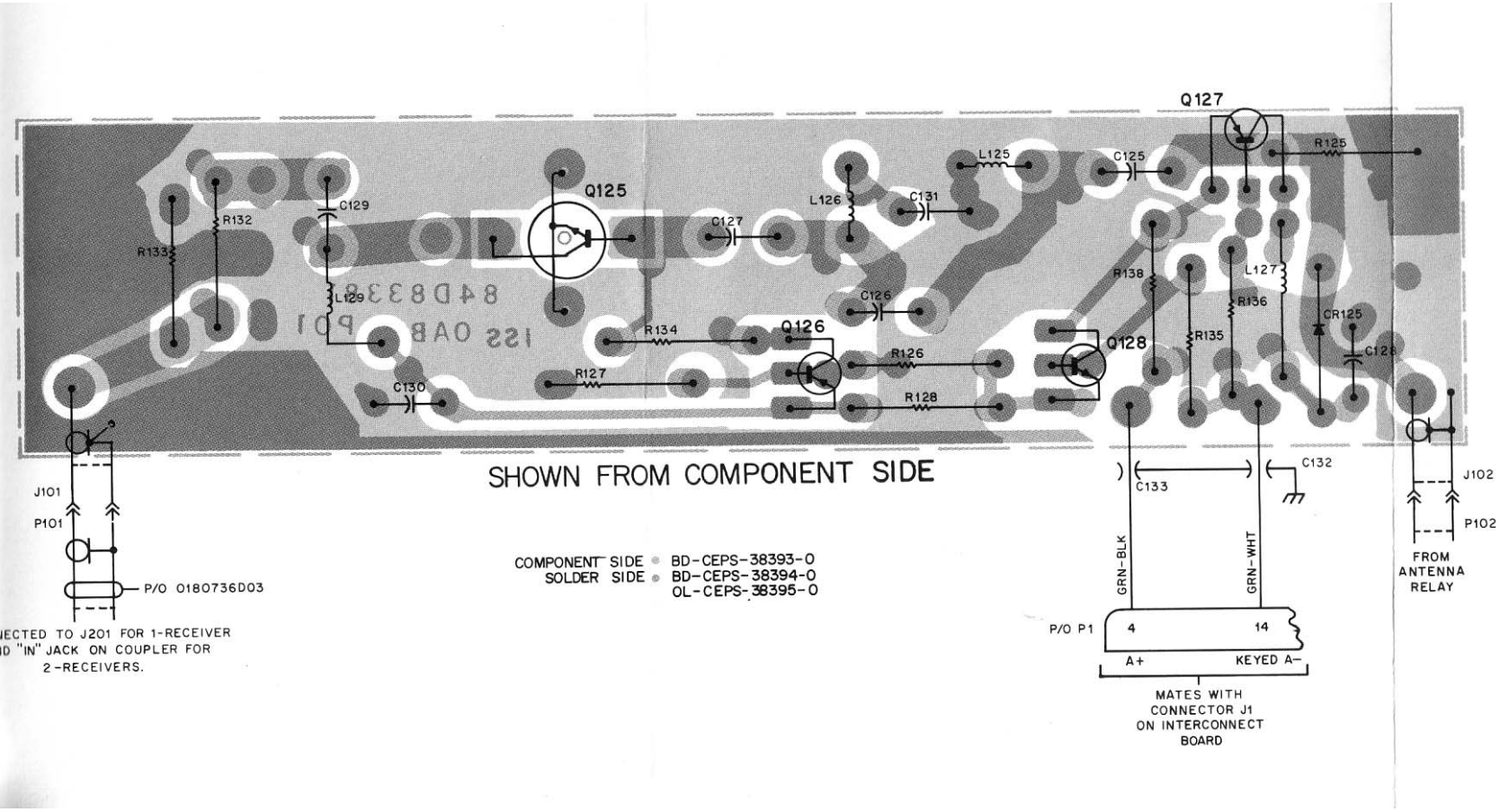

TRANSISTOR BASE DETAILS (SHOWN FROM COMPONENT SIDE)

TLE2393A UHF RF Preampli
Schematic Diagram, Circuit B
and Parts List
Motorola No. ***PEPS-38570-A***
11/15/85 -PHI

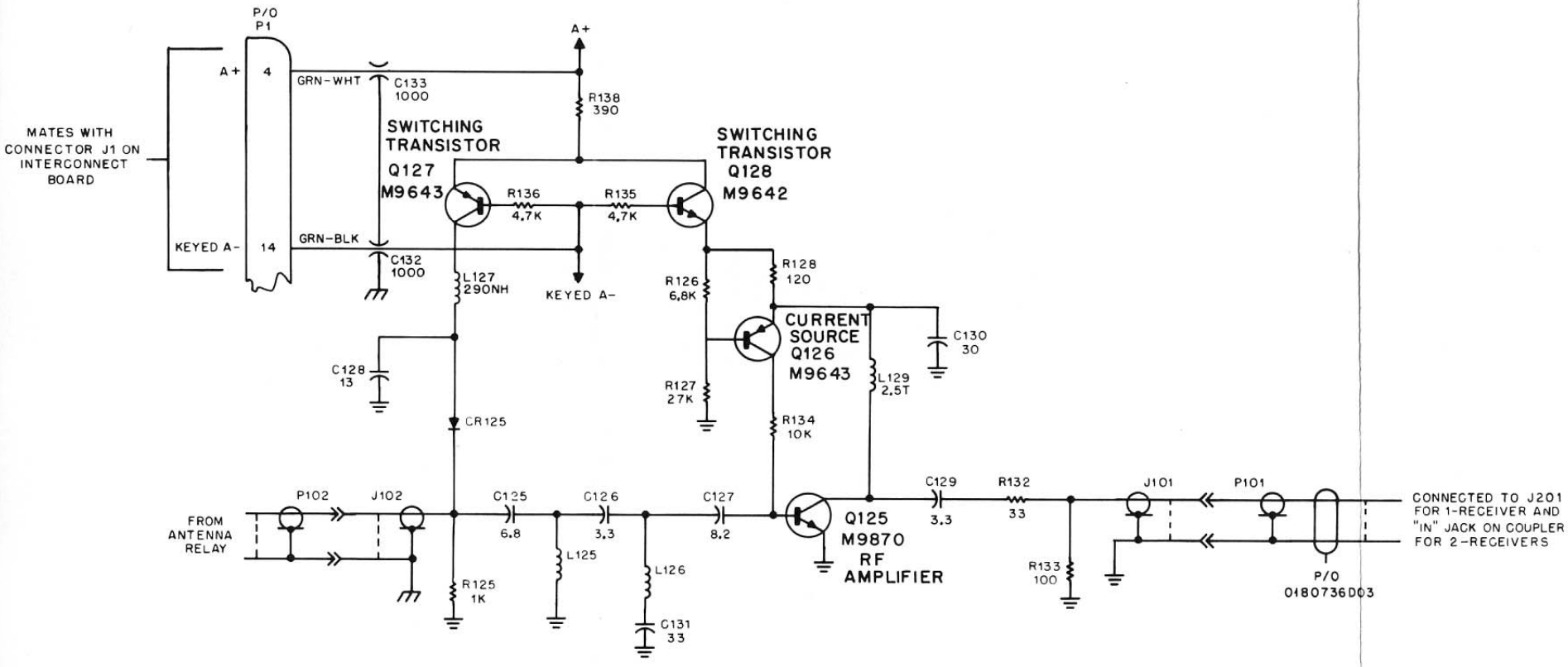

NOTES:

1. UNLESS OTHERWISE INDICATED: RESISTOR VALUES ARE IN OHMS; CAPACITORS VALUES ARE IN PICOFARADS.

CEPS-38396-O

ANTENNA SWITCH
MODELS TRN5864A, TRN9168A, AND TRN9755A

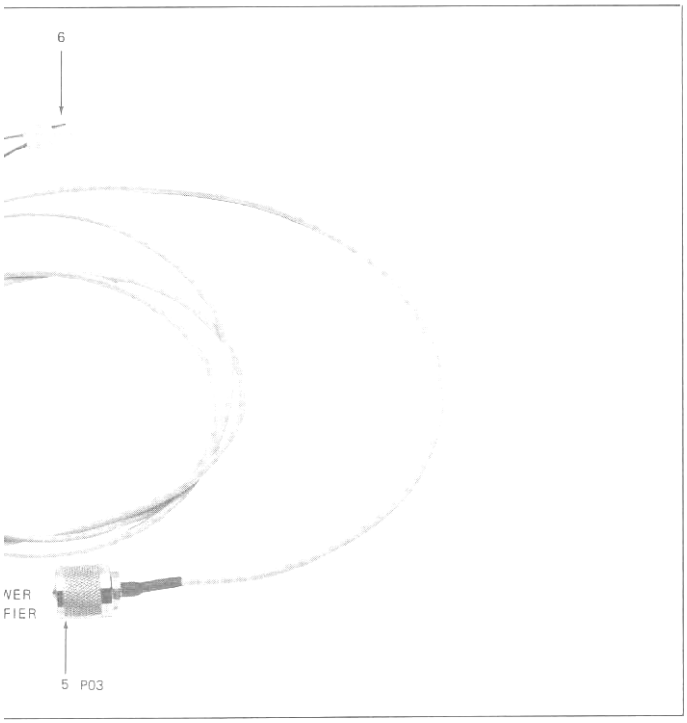

4.3 Unfasten the 2 pin molex connector.

4.4 Remove the antenna switches spanner nut from the junction box.

5. Installation is the reverse of the above. Remember to fasten the cables with new tie wraps.

parts list

TRN9168A Antenna Switch
TRN5864A Antenna Switch PL-8685-B

REFERENCE SYMBOL	MOTOROLA PART NO.	DESCRIPTION
1	2-80006A01	NUT, spanner
2	4-114522	LOCKWASHER, 5/8"
3	43-82895N01	SPACER
4	28-82875N01,	CONNECTOR, receiver (TRN5864A)
	28-82331G01 or	CONNECTOR, preamp (TRN9618A)
	28-84282D01	CONNECTOR, receiver (TRN9755A)
5	28-84579F01	CONNECTOR, PA (P03) Intermittent Duty
6		J801 consists of 15-84861K02 Housing 29-84706E05 TERMINALS
7		ANTENNA SWITCH, non-serviceable
	37-132251	TUBING, heat shrink, 2"

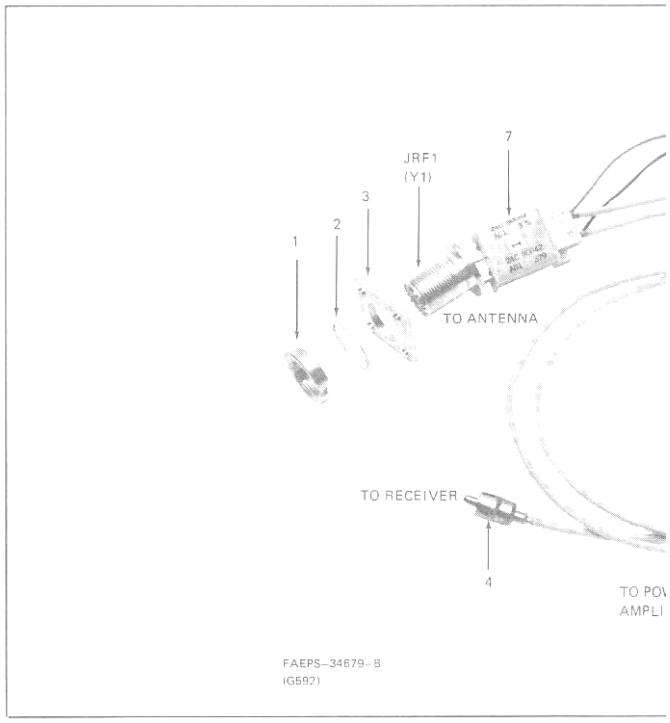

ANTENNA SWITCH REPLACEMENT

1. Remove the card cage per manual instructions in the maintenance section.

2. Note the positions of the tie wraps and cable clamps, and pay attention to cable routing.

3. Remove the appropriate cable clamps, and clip the necessary tie wraps.

4. Remove the antenna switch:

4.1 For the TRN5864A unfasten the receiver antenna connector from card cage chassis (2 screws).

For the TRN9168A antenna relay, unplug the antenna connector from the input of the preamplifier.

4.2 Disconnect the rf connector from the PA output.

MOTOROLA INC.
Communications Sector

2-RECEIVER COUPLER
MODEL TLE5551A

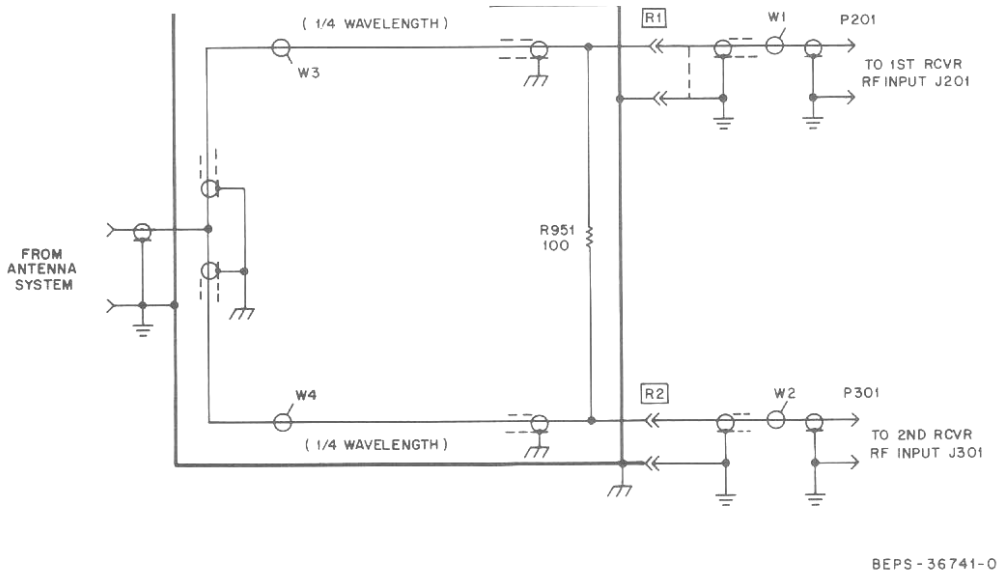
(1/4 WAVELENGTH)
W3
R1
W1
P201
TO 1ST RCVR
RF INPUT J201
FROM
ANTENNA
SYSTEM
R951
100
W4
R2
W2
P301
(1/4 WAVELENGTH)
TO 2ND RCVR
RF INPUT J301
BEPS-36741-0

parts list

MOTOROLA INC.
Communications
Sector

UHF DUPLEX
MODELS T4084A, 85A,
406-520

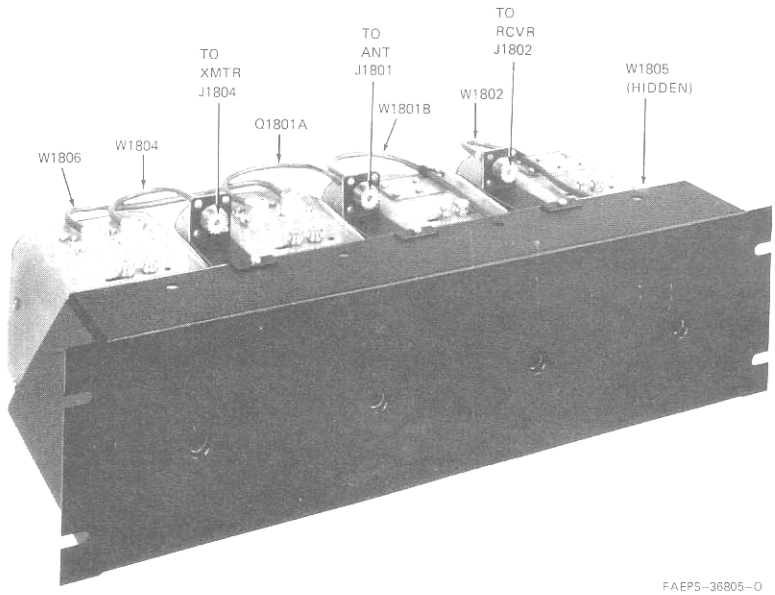

Figure 1. Typical 4-Cavity Duplexer

1. INTRODUCTION

These duplexers are for use with Motorola FM two-way radio communications equipment operating in the 406-520 MHz frequency range. The duplexers are 1/4-wave cavity resonators, which are temperature compensated and are tuned with an adjustable center conductor. The duplexers contain loops or probes terminated in low profile receptacle connectors with Teflon™ insulation. Tables 1 and 2 provide the performance specifications of each model duplexer. Figure 2 provides a model breakdown of these units.

These units may be used in the antenna circuit of a base or repeater station to eliminate or minimize receiver desensitization or intermodulation due to strong local signals. Similarly, they may be used to reduce transmitter noise or intermodulation products.

Table 1. Model T4084A Performance Specifi

Operating Frequency	406-470 MHz
Transmitter or Receiver Insertion Loss: 406-430 MHz 430-470 MHz	 1.0 dB 1.0 dB
RCVR Isolation at Transmit Frequency	50 dB
XMTR Noise Suppression at Receive Frequency	50 dB
Transmitter-Receiver Isolation	45 dB
Frequency Separation (Min.)	5 MHz
VSWR Maximum	2:1
Maximum Power Input	250 W
Temperature Range	-30°C to +60°C
Size	19" W × 5-1/2" H × 8-
Termination	UHF Female

SPECIFICATIONS SUBJECT TO CHANGE WITHOUT

Teflon is a registered trademark of DuPont

©Motorola, Inc. 1985
All Rights Reserved
Printed in U.S.A.

technical writing services
1301 E. Algonquin Road, Schaumburg, IL 60196

MODEL BREAKDOWN CHART

FOR

PASS-REJECT DUPLEXERS

406-520 MHZ

MODEL T4084A (TLE2351A); T—R *GTE* 5 MHZ

MODEL T4085A (TLE2363A); T—R *GTE* 3 MHZ

MODEL T5002A (TLE2383A); 2 MHZ *LTE* T—R *LT* 3 MHZ

CODE:

T—R = TRANSMIT—RECEIVE = FREQUENCY SEPARATION

LT = LESS THAN

LTE = LESS THAN OR EQUAL TO

GT = GREATER THAN

GTE = GREATER THAN OR EQUAL TO

● = ONE ITEM SUPPLIED

2 = INDICATES QUANTITY SUPPLIED

★ = ALTERNATIVE (ONE SUPPLIED) FREQUENCY DEPENDENT ITEM

KIT	DESCRIPTION	ITEM DESCRIPTION TLE2351A 2-CAVITY DUPLEXER (406-470 MHZ)	TLE2363A 4-CAVITY DUPLEXER (406-520 MHZ)	TLE2383A 4-CAVITY DUPLEXER (406-470 MHZ)	
N8930A	DUPLEXER ANTENNA CABLE (406-430 MHZ)	★	★	★	TKI
N8931A	DUPLEXER ANTENNA CABLE (430-470 MHZ)	★	★	★	TKI
N8932A	DUPLEXER ANTENNA CABLE (470-520 MHZ)		★		TKI
N8933A	4-CAVITY DUPLEXER TRANSMITTER CABLE		●	●	TKI
N8934A	4-CAVITY DUPLEXER RECEIVER CABLE		●	●	TKI
N8935A	2-CAVITY DUPLEXER TRANSMITTER CABLE	●			TKI
N8936A	2-CAVITY DUPLEXER RECEIVER CABLE	●			TKI
N8962A	4-CAVITY DUPLEXER INTERCONNECT CABLES (406-430 MHZ)		★	★	TKI
N8963A	4-CAVITY DUPLEXER INTERCONNECT CABLES (430-470 MHZ)		★	★	TKI
N8964A	4-CAVITY DUPLEXER INTERCONNECT CABLES (470-520 MHZ)		★		TKI
N5885A	2-CAVITY DUPLEXER MOUNTING HARDWARE	●			TRI
N9037A	COUPLING PROBES	●	2	2	TRI
N9038A	4-CAVITY DUPLEXER MOUNTING HARDWARE		●	●	TRI
N9040A	COUPLING LOOPS	●	2		TRI
N9041A	CAVITY (406-520 MHZ)	2	4	4	TRI
N9124A	COUPLING LOOPS (2 MHz LTE T—R LT 3 MHZ)			2	TRI

EPS-37322-A

Figure 2. Duplexer Model Breakdown Chart

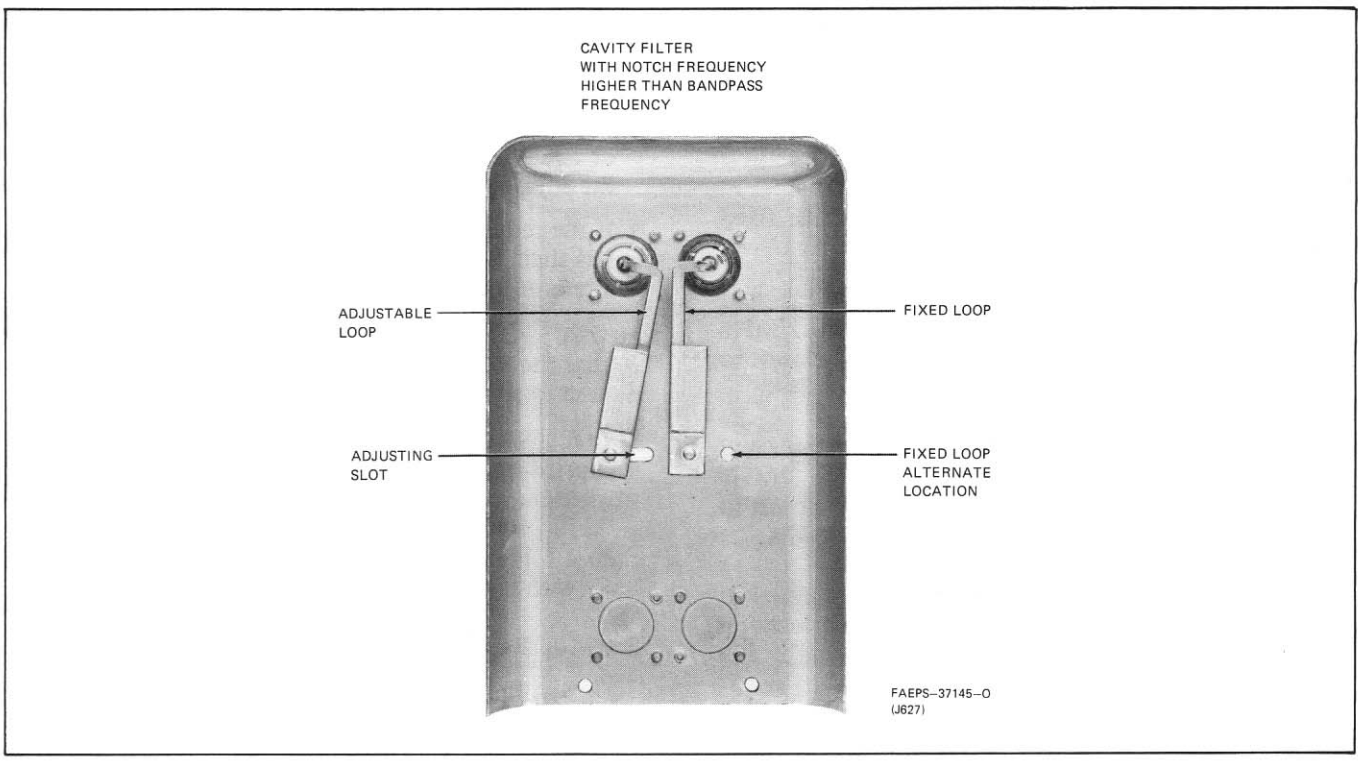

Figure 5. Notch Coupling Loops (Interior View)

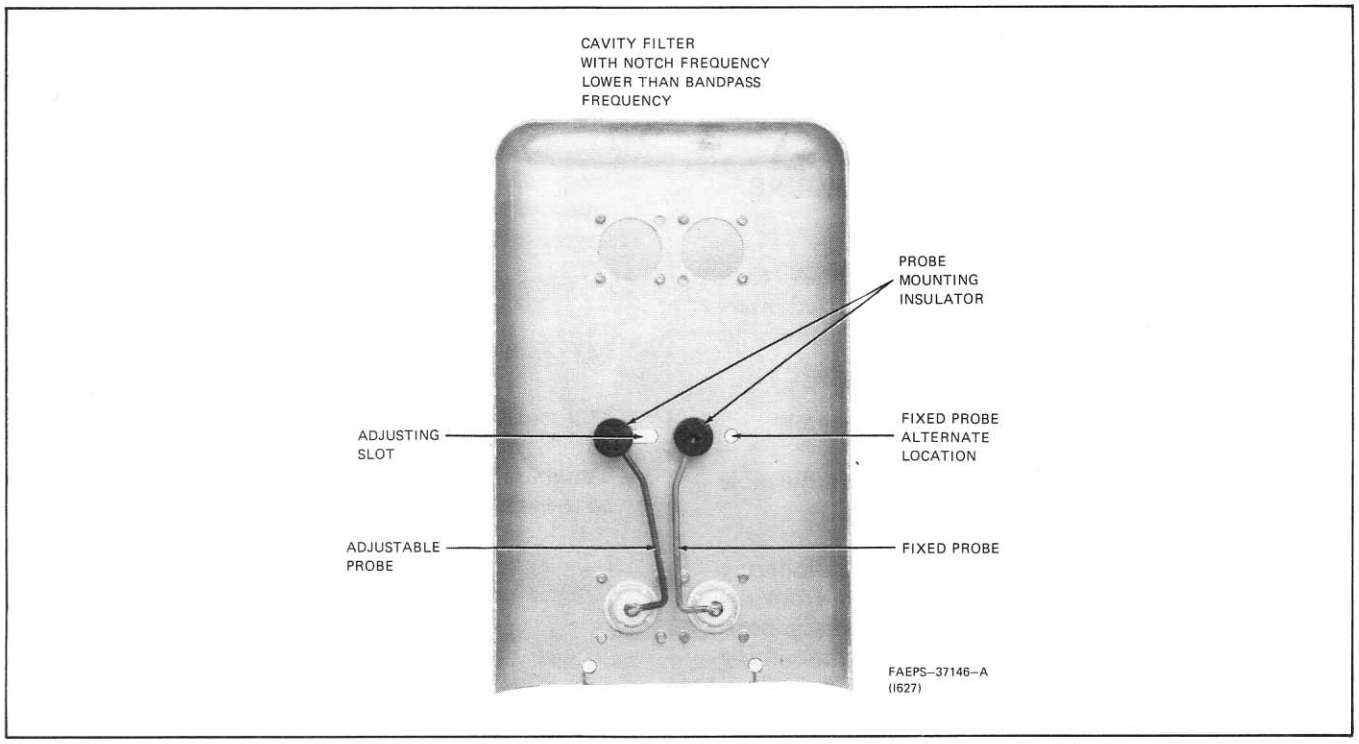

Figure 6. Notch Coupling Probes (Interior View)

E NOTCH PROCEDURE

n (Reject) Frequency is Below the
ency (Probe Cavities):

ne knurled nut slightly.

until minimum signal is received and
e nut. The probe may shift slightly
d. Therefore, it is advisable to have
h so that it can be barely moved while

r any other probe cavity.

n (Reject) Frequency is Above the
ency:

ne knurled screw slightly.

ew until minimum signal is received
the screw. The loop may shift slight-
ned. Therefore, it is advisable to have
ough so that it can be barely moved

r any other loop cavities.

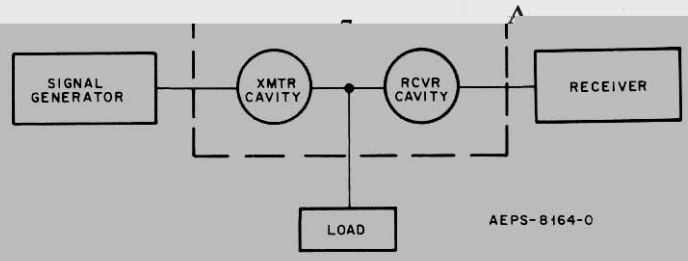

Figure 10. Method 2 Transmitter Branch Reject Test Set-Up

Step 8. Tune the transmitter cavity(s) for maximum attenuation by using the procedure Tuning The Notch.

Step 9. Connect the equipment as shown in Figure 11.

Step 10. Set the local oscillator source to the exact duplex frequency separation.

Step 11. Tune the receiver cavity(s) for maximum attenuation by using the Tuning The Notch procedure.

Step 12. Connect the duplexer to the transmitter, receiver and antenna with 50-ohm coaxial cable. Adjust the transmitter final amplifier for rated power into the duplexer.

5.3 TUNING TH

5.3.1 If the Notch
Pass Frequ

Step 1. Loosen th

Step 2. Slide nut
then re-tighten th
when it is tightene
the nut tight enoug
adjusting it.

Step 3. Repeat fo

5.3.2 If the Notch
Pass Frequ

Step 1. Loosen th

Step 2. Slide scre
and then re-tighten
ly when it is tighter
the screw tight en
while adjusting it.

Step 3. Repeat fo

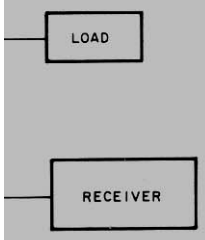

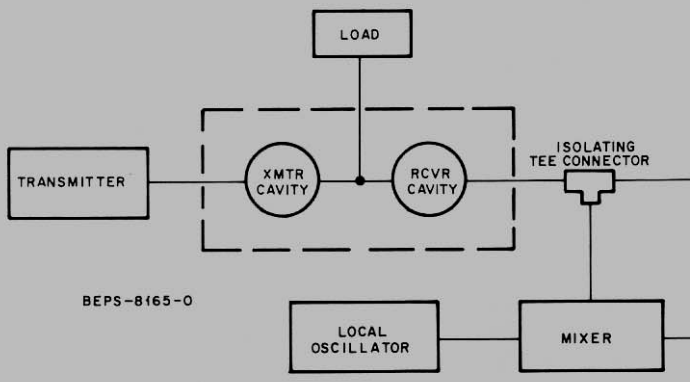

Figure 11. Method 2 Receiver Branch Reject Test Set-Up

TRN9040A Coupling Loops (see note) PL-8638-A

REFERENCE SYMBOL	MOTOROLA PART NO.	DESCRIPTION
	1-80778D85	Assembly Loop Right; includes:
	24-84238A01	LOOP, cavity
	1-84997C01	HOUSING ASSEMBLY; includes:
	4-84999C01	WASHER, spacer
	9-84000D01	JACK, reversed end
	14-84001D01	INSERT, connector
	15-84998C01	HOUSING, connector
	42-82388C01	RING, retainer
	1-80778D86	Assembly Loop Left; includes:
	24-84238A03	LOOP, cavity
	1-84997C01	HOUSING Assembly; includes:
	4-84997C01	WASHER, spacer
	9-84000D01	JACK, reversed end
	14-84001D01	INSERT, connector
	15-84998C01	HOUSING, connector
	42-82388C01	RING, retainer

note: Used for: T-R Frequency Separation; GTE 3 MHz

TRN9041A Cavity (406-405 MHz) PL-8639-A

REFERENCE SYMBOL	MOTOROLA PART NO.	DESCRIPTION
2	1-80778D95	Assembly Can Hardware; includes:
	1-80778D89	Assembly Tube miscellaneous; includes:
	41-84246A01	SPRING, contact
	47-84248A02	TUBE
	15-84244A02	HOUSING, cavity
	43-82155P01	BUSHING
4	47-82154P01	SHAFT, tuning
		mechanical parts
	3-7110	SCREW, set: 8-32 × 3/16"; 3 used
	4-84250A01	WASHER, flat: 0.39 × 0.75 × 0.03; 2 used
	4-84251A01	WASHER, flat: 0.39 × 0.75 × 0.03 copper
	4-84994C03	WASHER
	41-82152P01	SPRING, coil cavity
	42-824977	RING, arm retainer
	47-84255A01	PLUNGER

TRN5885A 2-Cavity Duplexer Mounting Hardware PL-8641-O

ITEM	MOTOROLA PART NO.	DESCRIPTION
1	3-3389	SCREW, tapping: 6-20 × 3/8"; 19 used
5	3-400356	SCREW, tapping: 4-24 × 1/4"; 28 used
6	15-84002D01	COVER, connector; 6 used
7	3-82245E04	SCREW, knurled; 12 used
8	2-84447A01	NUT, knurled; 2 used
9	15-84993C04	COVER, housing; 2 used
10	64-84253A03	PLATE, cover
16	27-82934N01	CHASSIS, duplexer
17	42-82143C01	CLAMP, cable: 3/16" (BLK); 2 used
		mechanical parts
	3-83498N08	SCREW, tapping: M6 × 1 × 10mm; 4 used
	4-7569	WASHER, flat: 0.145 × 0.312 × .027"; 2 used
	4-9746	LOCKWASHER, #8 split; 4 used
	4-9777	LOCKWASHER, #4 split; 28 used
	4-10058B37	WASHER, nylon (BLK); 4 used
	4-82418B01	WASHER, insulator; 4 used
	14-84240A01	INSULATOR, probe mounting; 2 used

TRN9124A Coupling Loops (see note) PL-8667-A

REFERENCE SYMBOL	MOTOROLA PART NO.	DESCRIPTION
	1-80778D85	Assembly Loop Right; includes:
	24-84238A01	LOOP, cavity
	1-84997C01	HOUSING ASSEMBLY; includes:
	4-84999C01	WASHER, spacer
	9-84000D01	JACK, reversed end
	14-84001D01	INSERT, connector
	15-84998C01	HOUSING, connector
	42-82388C01	RING, retainer
	1-80780D30	Assembly Loop Left; includes:
	24-84238A05	LOOP, cavity
	1-84997C01	HOUSING ASSEMBLY; includes
	4-84999C01	WASHER, spacer
	9-84000D01	JACK, reversed end
	14-84001D01	INSERT, connector
	15-84998C01	HOUSING, connector
	42-82388C01	RING, retainer

note: Used for: 2 MHz GTE T-R Frequency Separation LT 3 MHz

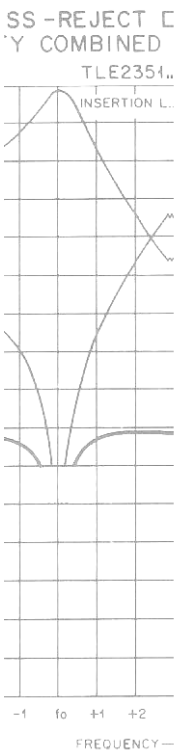

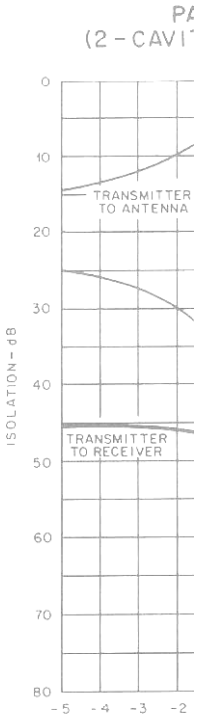

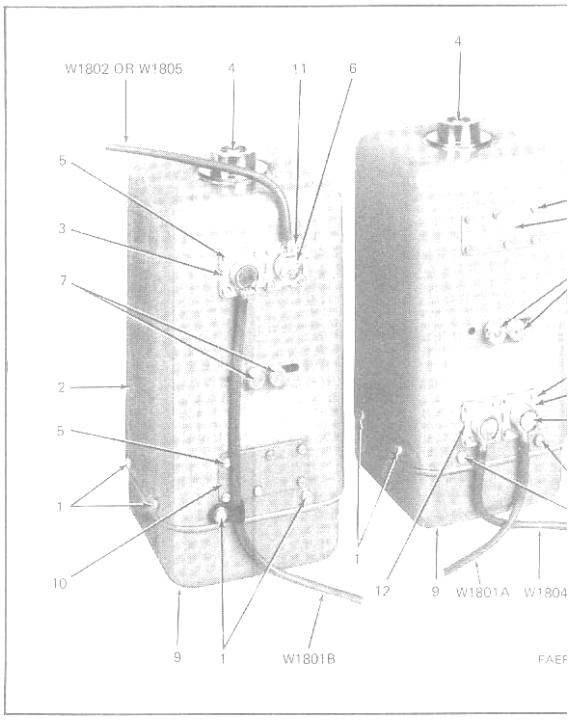

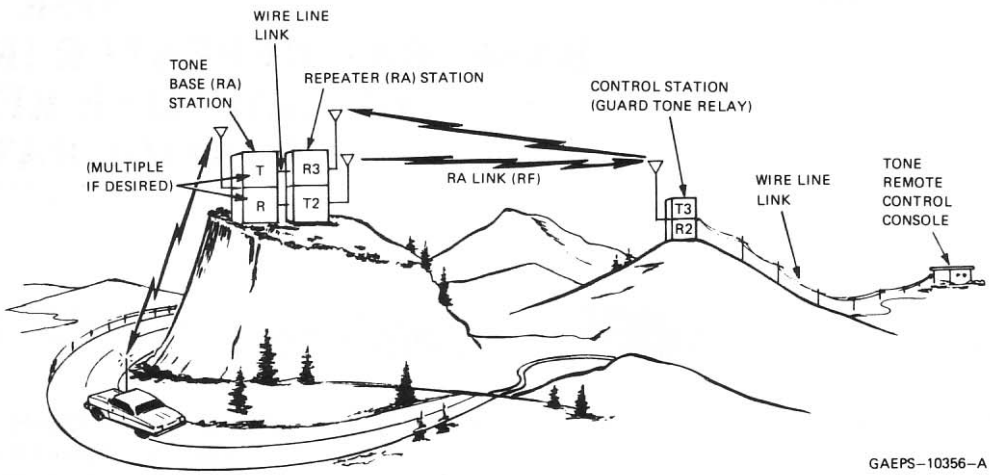

Figure 2. Typical Guard Tone Relay System

(switched ground) to the repeater (RA) station when the receiver in the base (RA) station quiets (receives a message).

1.2.4 When the station is converted for base (RA) operation, separate wire-line remote control is not required. Control is via rf from the control dispatch point or mobile with the control point given priority. This does not involve further model complement change concerning tone remote control models, but does remove the dc transfer module in dc remote control models.

1.2.5 RA link equipment (Base (RA)-Repeater (RA) stations) is used in two basic systems — "Repeater (RA) Systems" and "Guard Tone Relay Systems." Both systems are used where extended range operation is required, or where natural or man made limitations to direct communications are encountered.

1.3 REPEATER (RA) OPTION C160

1.3.1 The repeater (RA) option C160 may be used with either *MSR 2000* or Micor™ 450-512 MHz repeater (RT) models (PL or carrier squelch). Note that either a duplexer or separate receive and transmit antennas are required on an RA repeater station to satisfy FCC rules and regulations for dispatcher priority.

1.3.2 A repeater (RA) station in conjunction with a base (RA) station and two or more remote stations, such as a mobile station and a control station, together form a "radio repeater (RA) system". See Figure 1.

1.3.3 The repeater (RA) - base (RA) combination has two modes of operation. It can: (1) receive and re-transmit a message from a control station to a mobile station; and, (2) receive and re-transmit a message from a mobile station to a control station.

1.3.4 The mobile units and the base (RA) station operate on frequency F1. The repeater (RA) station transmits on frequency T2 and receives on frequency R3. The control station transmits on frequency T3 and receives on frequency R2.

1.3.5 When the control station calls the mobile unit, the repeater (RA) turns on the base (RA) station transmitter. When receiver quieting of the repeater (RA) station reaches a predetermined level, the squelch gate in the repeater (RA) station actuates. This keys the transmitter in the base (RA) station. Audio is routed from the repeater (RA) station's receiver to the base (RA) station's transmitter audio input. The control station (dispatcher's) message is then sent to the mobile units on frequency T1 by the base (RA) station's transmitter.

1.3.6 When a mobile station calls the control station (dispatcher), the base (RA) station turns on the repeater (RA) station's transmitter. (When receiver quieting of the base (RA) stations reaches a predetermined level, the squelch gate in the base (RA) station actuates. This keys the transmitter in the repeater (RA) station.) Audio is routed from the base (RA) station's receiver to the repeater (RA) station's transmitter audio input. The mobile station's message is then sent to the control station on frequency T2 by the repeater (RA) station's transmitter.

1.3.7 The control station has operational priority of the base (RA) station. The dispatcher can seize control of the RA system even through a mobile transmission is in process. The control station transmits on T3. Repeater (RA) receiver (R3) is always fully operational, and will, when its receiver quieting reaches a predetermined level, cause the base (RA) station to key, over- riding the mobile.

MSR 2000™
UHF Base and Repeater Stations
450-512 MHz

68P81061E55-C